NAVSHIPS 94715

*(Non Registered)*

TECHNICAL MANUAL

*for*

# RADIO RECEIVING SETS
# AN/WRR-2A
# *and* AN/FRR-59A

DEPARTMENT OF THE NAVY
BUREAU OF SHIPS

*Approved by BuShips: 17 March 1964*

K4XL's BAMA

This manual is provided FREE OF CHARGE from the "BoatAnchor Manual Archive" as a service to the Boatanchor community.

It was uploaded by someone who wanted to help you repair and maintain your equipment.

If you paid anyone other than BAMA for this manual, you paid someone who is making a profit from the free labor of others without asking their permission.

You may pass on copies of this manual to anyone who needs it. But do it without charge.

Thousands of files are available without charge from BAMA. Visit us at http://bama.sbc.edu

# LIST OF EFFECTIVE PAGES

| PAGE NUMBERS | CHANGE IN EFFECT | PAGE NUMBERS | CHANGE IN EFFECT |
|---|---|---|---|
| Title Page | Original | 4-0 to 4-48 | Original |
| ii to xi | Original | 5-1 to 5-118 | Original |
| 1-0 to 1-4 | Original | 6-1 to 6-70 | Original |
| 2-1 to 2-16 | Original | 7-1 to 7-65 | Original |
| 3-1 to 3-13 | Original | i–0 to i–2 | Original |

**NATIONAL CO., INC. MALDEN, MASSACHUSETTS** **CONTRACT: NObsr 91085**

Errors found in this publication (other than obvious typographical errors) which have not been corrected by means of Temporary Changes or Permanent Changes should be reported. Such report should include the complete title of the publication and the publication number (short title), identify the page and line or figure and location of the error, and be forwarded to the Publications Section of the Bureau of Ships.

All requests for this publication should be directed to the Naval Supply Depot, 5801 Tabor Avenue, Philadelphia 20, Pennsylvania.

# TABLE OF CONTENTS

## SECTION 1—GENERAL INFORMATION

## SECTION 2—INSTALLATION

## SECTION 3—OPERATOR'S SECTION

## SECTION 3—OPERATOR'S SECTION (Cont.)

## SECTION 4—PRINCIPLES OF OPERATION

# TABLE OF CONTENTS (Cont.)

## SECTION 5—TROUBLE-SHOOTING

## SECTION 6—REPAIR

## SECTION 6—REPAIR (Cont.)

## TABLE OF CONTENTS (Cont.)

### SECTION 6—REPAIR (Cont.)

### SECTION 7—PARTS LIST

# LIST OF ILLUSTRATIONS

## SECTION 1—GENERAL INFORMATION

## SECTION 2—INSTALLATION

## SECTION 3—OPERATOR'S SECTION

## SECTION 4—PRINCIPLES OF OPERATION

## SECTION 4—PRINCIPLES OF OPERATION (Cont.)

## LIST OF ILLUSTRATIONS (Cont.)

### SECTION 4—PRINCIPLES OF OPERATION (Cont.)

### SECTION 4—PRINCIPLES OF OPERATION (Cont.)

### SECTION 5—TROUBLE-SHOOTING

## LIST OF ILLUSTRATIONS (Cont.)

### SECTION 5—TROUBLE-SHOOTING (Cont.)

### SECTION 5—TROUBLE-SHOOTING (Cont.)

## LIST OF ILLUSTRATIONS (Cont.)

### SECTION 5—TROUBLE-SHOOTING (Cont.)

### SECTION 5—TROUBLE-SHOOTING (Cont.)

### SECTION 6—REPAIR

## LIST OF ILLUSTRATIONS (Cont.)

### SECTION 6—REPAIR (Cont.)

# LIST OF TABLES

## SECTION 1—GENERAL INFORMATION

## SECTION 2—INSTALLATION

## SECTION 3—OPERATOR'S SECTION

## SECTION 5—TROUBLE-SHOOTING

## SECTION 5—TROUBLE-SHOOTING (Cont.)

## SECTION 6—REPAIR

## SECTION 7—PARTS LIST

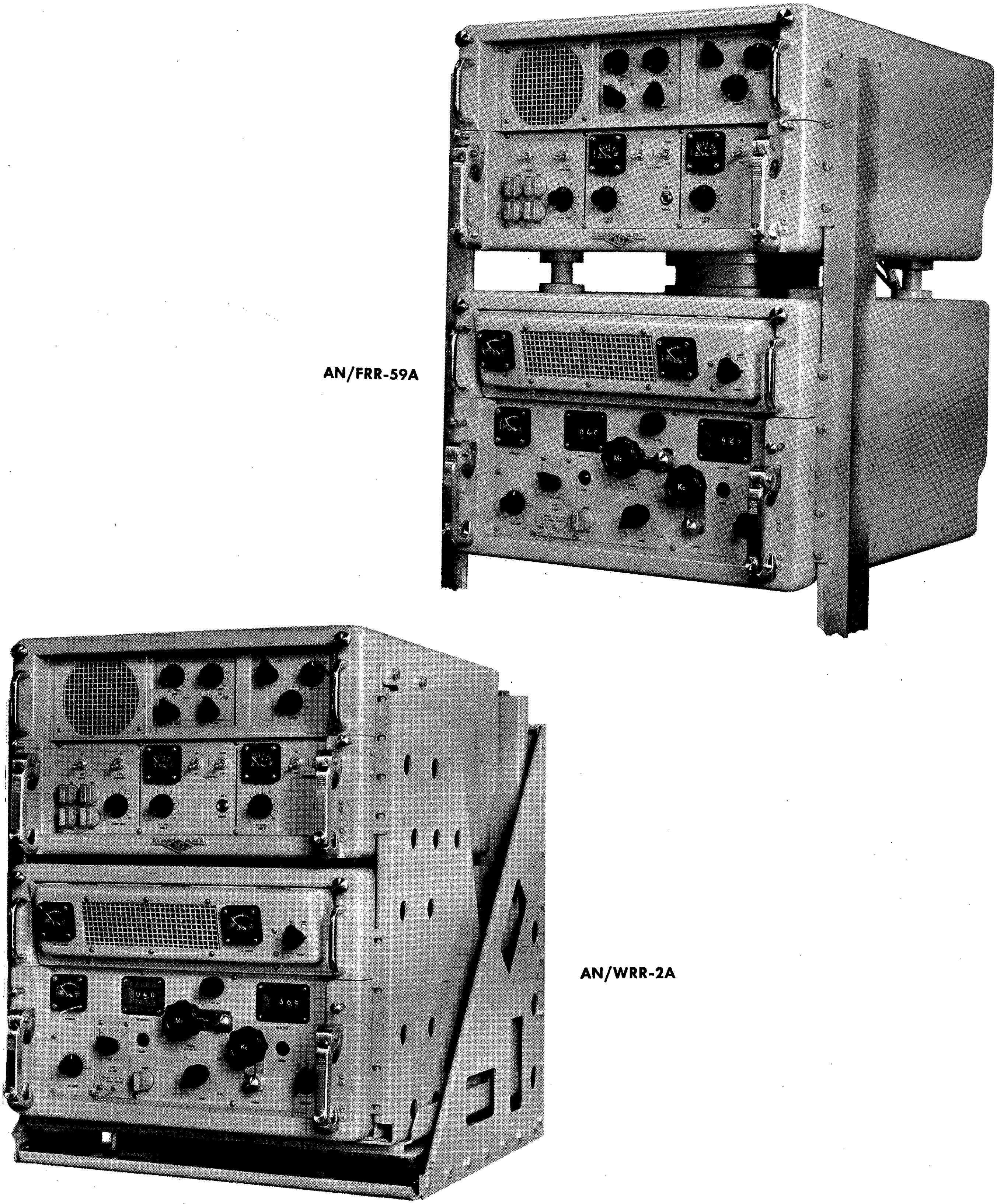

*Figure 1—1. Radio Receiving Set, General View of Equipment*

# SECTION 1
# GENERAL INFORMATION

## 1-1. INTRODUCTION.

A general view of Radio Receiving Sets AN/WRR-2A and AN/FRR-59A appears in figure 1-1. The AN/WRR-2A is designed for shipboard installation and is equipped with Mounting MT-2293A/WRR-2 (mounting cradle). The AN/FRR-59A is for shore operation and is designed for rack mounting. Otherwise, the two receivers are identical.

## 1-2. FUNCTIONAL DESCRIPTION.

The AN/WRR-2A and AN/FRR-59A are triple-conversion superheterodyne receivers designed to operate in the frequency range of 2 mc to 32 mc. They are intended for use in all classes and types of ships employed in the United States Navy in communications between ships, between ship and shore, and with aircraft.

The receiver is intended primarily for the reception of single-sideband transmissions with full carrier suppression. It will also receive conventional amplitude-modulated (AM) signals of various types, including continuous wave (CW), modulated continuous wave (MCW), voice, facsimile, and frequency-shift teletype. In order to meet present strict frequency tolerances, special features of the receiver provide extremely accurate tuning and a very high degree of stability over long periods of operation. Simultaneous use of both upper-and lower-sideband channels for receiving two different types of intelligence is possible. This capability does not extend to concurrent reception of single-sideband and AM signals.

The receiver will net with any transmitter capable of operating in the same frequency range, provided the emitted signal is one of the types mentioned above, and the receiver is compatible with existing shipboard auxiliary equipments which process facsimile and frequency-shift teletype data.

The receiver consists of Electronic Frequency Converter CV-920A/URR (converter drawer) and Intermediate Frequency-Audio Frequency Amplifier AM-2477A/URR (demodulator drawer) in individual, joined cabinets. The demodulator drawer is above the converter drawer.

Signal voltages applied at the receiver antenna are fed to the converter circuits through a special coupling device which offers protection against damage from excessively high signal voltages. In the converter drawer, the frequency range is divided into four tuning bands. A selector switch and direct-reading counters facilitate band selection and tuning. Tuning from 2 mc to 32 mc may be incremental or continuous. In the former method, a crystal-controlled internal frequency standard permits extremely accurate settings in increments of a 0.5 kilocycle; complete cancellation of oscillator frequency drift is achieved, and a frequency stability of one part in $10^7$ (one cycle in 10 mc) is obtained. Continuous tuning must be used for frequencies which terminate in a fraction of a half kilocycle; this method reduces slightly the stability of the receiver.

After the process of tuning, triple frequency conversion, and intermediate-frequency (IF) amplification have been performed in the converter drawer, the resultant IF signal is passed to the upper, or demodulator, drawer, where further IF and audio frequency (AF) amplification and detection are performed. The demodulator drawer contains three detector-amplifier sections. One processes conventional AM signals and has a beat-frequency oscillator (BFO) for reception of CW, facsimile, and frequency-shift teletype signals. The other two sections detect and amplify signals in the upper- and lower-sideband channels. Each section has its own automatic gain control (AGC).

Each drawer has its own separate power supply.

## 1-3. FACTORY OR FIELD CHANGES.

No factory or field changes have been made.

## 1-4. QUICK REFERENCE DATA.

*a.* GENERAL.

(1) NOMENCLATURE: Radio Receiving Set AN/WRR-2A; Radio Receiving Set AN/FRR-59A

(2) CONTRACT NUMBER: NObsr 91085

(3) CONTRACTOR: National Company, Inc., Malden, Massachusetts, U.S.A.

(4) DATE OF CONTRACT: 16 December 1963.

(5) COGNIZANT NAVAL INSPECTOR: Inspector of Naval Material, 495 Summer Street, Boston 10, Mass.

(6) NUMBER OF PACKAGES: 2

(7) AMBIENT TEMPERATURE LIMITATIONS: Will operate reliably within limits of 0°C (+32°F) to +50°C (+122°F) after nonoperating exposure to temperatures from −62°C (−80°F) to +75°C (+167°F).

(8) VENTILATION: Fan cooled upper limit 112° ±5°F; lower limit 86° ±5°F; heat dissipation 14.22 BTU/min.

(9) CENTER OF GRAVITY: (See figure 2-1)

*b.* ELECTRICAL CHARACTERISTICS.

(1) FREQUENCY RANGE.

(*a*) Nominal: 2 mc to 32 mc, inclusive.

(*b*) Frequency Overlap: minimum 1.9 mc to 32.1 mc, inclusive.

(2) TUNING BANDS AND BAND RANGES: four bands — 2-4 mc, 4-8 mc, 8-16 mc, 16-32 mc.

(3) TYPE OF FREQUENCY CONTROL.

*(a)* Incremental tuning: 0.5 kc tuning increments controlled by a crystal standard.

*(b)* Continuous tuning: 330 100-kc increments controlled by the crystal standard; lesser increments oscillator-controlled.

(4) TYPES OF RECEPTION.

*(a)* A1: on/off keyed CW.

*(b)* A2: on/off keyed tone-modulated CW.

*(c)* A3: voice (amplitude) modulated CW.

*(d)* A9: single sideband.

*(e)* F1: frequency-shift teletype, high-speed data transmission, and four-channel multiplex.

*(f)* F4: facsimile.

(5) MAXIMUM RECEIVER OUTPUT.

*(a)* AF line terminals: minimum 60 mw into 600 ohm noninductive-resistive load.

*(b)* Phone jacks: maximum 15 mw into 600 ohm noninductive-resistive load.

(6) FREQUENCY-CONTROL CRYSTAL (INTERNAL STANDARD).

*(a)* Government designation: CR-36/U (special) in HC-6/U holder.

*(b)* Oscillation frequency: 1 mc.

*(c)* Crystal temperature coefficient: one part per million per degree C from +80°C (+176°F) to +90°C (+194°F).

*(d)* Crystal operating temperature: 85°C (185°F) ±1°C.

*(e)* Frequency accuracy over the operating range: ±0.0005% of the nominal frequency at 85°C (185°F) ±5 cps at 1 mc.

(7) FREQUENCY STABILITY AND ACCURACY DATA.

*(a)* Incremental tuning (full drift cancellation): 1 part in $10^7$ per day.

*(b)* Continuous tuning: 1 part in $10^7$ ±150 cycles per day.

*(c)* Environmental changes:

| *Change* | *Frequency Variation* |
|---|---|
| Line voltage, from 103.5 vac to 126.5 vac | 1 part in $10^8$ (A9) |
| Temperature, from 0°C (32°F) to 50°C (122°F) | 1 part in $10^7$ ±150 cps (A1);<br>1 part in $10^7$ (A9) |
| Relative humidity, from 30% to 90% | 1 part in $10^7$ ±100 cps (A1);<br>1 part in $10^7$ (A9) |

(8) RECEIVER SENSITIVITY. — Listed below are the minimum input voltages required to cause a desired output signal of 6 milliwatts to appear across an output load of 600 ohms at a predetermined level above that of noise:

| *Mode* | *IF Bandwidth in kc* | *Input Voltage in uv* |
|---|---|---|
| A1 | 0.35 | 1.5 |
| A1 | 1.0 | 2.5 |
| A2 | 3.0 | 3.0 |
| A3 | 12.0 | 6.0 |
| A9 | 12.0 | 4.0* |
| F1 | 3.0 | 3.0 |
| F4 | 3.0 | 3.0 |

*Applicable to each sideband AF output.

(9) ELECTRICAL CHARACTERISTICS OF RECOMMENDED ANTENNA. — For optimum performance, an antenna having a 50-ohm terminal impedance is recommended.

(10) PRIMARY POWER REQUIREMENTS.

*(a)* Voltage: 115 v, 50-60 cps, single-phase. Primary voltage regulation not to exceed ±10%.

*(b)* Current requirements: nominal, 2.17 a.

*(c)* Power, nominal: 250 w at 115 v, 60 cps.

(11) HETERODYNE FREQUENCY RANGE.

*(a)* High-frequency oscillator: 3.725 mc to 33.725 mc.

*(b)* Interpolation oscillator: 680 kc to 580 kc.

(12) IF FREQUENCIES DEVELOPED.

*(a)* First conversion: 1625 kc to 1725 kc (100 kc band).

*(b)* Second conversion: 220 kc.

*(c)* Third (final) conversion: 80 kc.

## 1-5. EQUIPMENT LISTS.

*a.* EQUIPMENT SUPPLIED. — Table 1-1 lists the names, quantities, dimensions, and weights of all equipments supplied with the receiver.

*b.* EQUIPMENT REQUIRED BUT NOT SUPPLIED. — Equipment required for operation of the receiver, but not supplied, is listed in table 1-2.

*c.* SHIPPING DATA. — The complete complement of equipment for an AN/WRR-2A installation is packed for shipment in two boxes (one wooden, the other pasteboard). The pasteboard box contains Mounting MT-2293A/WRR-2 (mounting cradle). The remaining equipment is packaged in the wooden box. A mounting cradle is not required for installation of the rack-mounted version of the Radio Receiving Set. Therefore, the complete complement of equipment for the AN/FRR-59A is shipped in one wooden box. Shipping data for the AN/WRR-2A and AN/FRR-59A are given in table 1-3.

*d.* TUBE COMPLEMENT. — Table 1-4 lists all tubes by types, showing the number of each type installed in the major units of the receiver. Semiconductors which function as tubes (except power devices) are included.

## TABLE 1-1. EQUIPMENT SUPPLIED

| QTY | NOMENCLATURE |  | OVER-ALL DIMENSIONS (in inches) |  |  | VOLUME (cu ft) | WEIGHT (lbs) |
|---|---|---|---|---|---|---|---|
|  | NAME | DESIGNATION | HEIGHT | WIDTH | DEPTH |  |  |
| 1 | Radio Receiving Set | AN/WRR-2A | 23.06 | 19.80 | 22.56 | 8.6 | 250 |
| 1 | Mounting | MT-2293A/WRR-2 | 25.00 | 22.00 | 20.63 |  | 50 |
| 1 | Signal IF Cable | W601 |  |  |  |  |  |
| 1 | Carrier Cable | W602 |  |  |  |  |  |
| 1 | Power Cable | W603-1 |  |  |  |  |  |
| 1 | Control Cable | W604 |  |  |  |  |  |
| 1 | Patch Cord Cable | W624 |  |  |  |  |  |
| 1 set | Miscellaneous Cable Connectors |  |  |  |  |  |  |
| 1 set | Mounting Cradle Hardware |  |  |  |  |  |  |
| 2 | Technical Manuals | NAVSHIPS 94715 |  |  |  |  |  |
| 1 | Maintenance Standards Book | NAVSHIPS 94715.42 |  |  |  |  |  |
| 1 | Operating Instructions Chart | NAVSHIPS 94715.21 |  |  |  |  |  |
| 1 | Radio Receiving Set | AN/FRR-59A | 24.47 | 19.00 | 22.56 | 8.6 | 250 |
| 1 | Signal IF Cable | W601 |  |  |  |  |  |
| 1 | Carrier Cable | W602 |  |  |  |  |  |
| 1 | Power Cable | W603-1 |  |  |  |  |  |
| 1 | Control Cable | W604 |  |  |  |  |  |
| 1 | Patch Cord Cable | W624 |  |  |  |  |  |
| 1 set | Miscellaneous Cable Connectors |  |  |  |  |  |  |
| 1 set | Rack Mount Hardware |  |  |  |  |  |  |
| 1 | Panel Filler |  |  |  |  |  |  |
| 2 | Technical Manuals | NAVSHIPS 94715 |  |  |  |  |  |
| 1 | Maintenance Standards Book | NAVSHIPS 94715.42 |  |  |  |  |  |
| 1 | Operating Instructions Chart | NAVSHIPS 94715.21 |  |  |  |  |  |

## TABLE 1-2. EQUIPMENT REQUIRED BUT NOT SUPPLIED

| QUANTITY | NOMENCLATURE |  | USE | REQUIRED CHARACTERISTICS |
|---|---|---|---|---|
|  | NAME | DESIGNATION |  |  |
| 1 | Headset | NT-49985-A or equivalent | Monitor audio output | 600 ohms impedance |
| 1 | Antenna | None | Intercepts transmitted RF signals |  |
| as required | Cable, Coaxial | RG10A/U | Transmission line antenna to receiver | 50 ohms impedance |
| as required | Cable, power | THFA or equivalent | Supply primary ac power from local source to receiver |  |
| as required | Cable, power | DHFA or equivalent | Audio output lines |  |

## TABLE 1-3. SHIPPING DATA

| BOX NO. | CONTENTS | DIMENSIONS (inches) | | | VOLUME (cu ft) | WEIGHT (lbs) |
|---|---|---|---|---|---|---|
| | | HEIGHT | WIDTH | DEPTH | | |
| RADIO RECEIVING SET AN/WRR-2A | | | | | | |
| 1 | Receiver, miscellaneous hardware, cables, and technical manuals | 32 | 28 | 31 | 15.5 | 348 |
| 2 | Mounting Cradle | 15.5 | 22.5 | 35 | 6.5 | 78 |
| RADIO RECEIVING SET AN/FRR-59A | | | | | | |
| 1 | Complete complement of equipment | 33 | 28 | 31 | 16.0 | 340 |

# SECTION 2

# INSTALLATION

## 2-1. UNPACKING AND HANDLING.

*a.* DESCRIPTION OF PACKAGING AND PACKING METHODS USED FOR AN/WRR-2A.—The major units and accessories comprising Radio Receiving Set AN/WRR-2A are packed for shipment in a wooden box and carton and packaged as follows:

(1) Box 1 contains the assembled receiver, interconnecting cables, plugs for attachment to external cabling, mounting hardware, and two copies of the technical manual.

(2) Box 2 contains the mounting cradle and all hardware required for assembly.

*b.* DESCRIPTION OF PACKAGING AND PACKING METHOD USED FOR AN/FRR-59A.—The complement of equipment for Radio Receiving Set AN/FRR-59A does not include a mounting cradle.

*c.* HANDLING.

**CAUTION**

The extended weight of either or both drawers will tip over the cabinet enclosure if sufficient support is not provided. During installation, check that the receiver cabinets are firmly secured to either the mounting cradle or the relay rack before replacing the drawers. The weight of either drawer alone requires at least two men to remove or replace it safely.

*d.* MECHANICAL INSPECTION.—A detailed check of the following items may avoid much inconvenience during installation and initial operation:

(1) Check for nuts, washers, or other foreign particles which may be lodged where they could cause a short circuit.

(2) Tighten any screws or nuts which may have worked loose.

(3) Look for broken wires and loose connections.

(4) Operate all mechanical controls through their full range of travel, or in each alternate direction, to detect bent shafts or other evidence of damage.

(5) See that all tubes are well seated in their sockets and that all tube shields are firmly in place. Make sure that antenna coupling fuse F2801 is in its holder in the front panel of the lower deck of the converter. Check F601 on the converter front panel behind the filter cover, and F651 and F652 on the front panel, lower demodulator deck.

## 2-2. POWER REQUIREMENTS AND DISTRIBUTION.

*a.* REQUIREMENTS.—See Section 1 quick reference data.

*b.* PRIMARY CONNECTION.—Application of primary ac power to the receiver requires the attachment of a female connector, which is packed with the receiver, to power cabling of the correct rating. This connector mates with a male fitting, designated POWER IN and mounted externally on the blister at the left rear of the demodulator drawer (see figure 6-6).

*c.* DISTRIBUTION.—Figure 5-1 shows the distribution of primary power within the equipment.

## 2-3. INSTALLATION LAYOUT.

The AN/WRR-2A is designed for installation on a standard mounting table or similar flat surface of adequate strength and dimensions. The AN/FRR-59A is designed for relay rack mounting.

*a.* TEMPERATURE AND VENTILATION.—The equipment will operate normally at ambient temperatures ranging from 0° (+32°F) to +50°C (+122°F). The temperature inside the cabinet may be expected to average 15 degrees above the ambient value. The receiver dissipates heat at the rate of 14.22 BTU per minute. Ventilation is provided by an axial fan located in the upper demodulator deck. A thermostatic control causes the axial fan to operate when the cabinet temperature reaches 112°F ±5°F and to stop at 86°F ±5°F. An adequate supply of reasonably clean fresh air will help the axial fan to perform properly.

*b.* CABLE LENGTHS.—Transmission line from the antenna to the receiver should be as short as possible.

*c.* SERVICE ACCESS. (See figures 2-1 and 2-2.)

*d.* INTERACTION WITH OTHER EQUIPMENT.—One of the principal features of the equipment is its ability to operate normally in an environment close to the antennas of high-powered transmitters. Internal shielding and filtering effectively reduce the danger of interaction with other equipment.

## 2-4. INSTALLATION REQUIREMENTS.

Installing the AN/WRR-2A consists of assembling and mounting the cradle, fastening the receiver cabinets in the cradle, and completing the necessary cable connections. Installing the AN/FRR-59A consists of fasten-

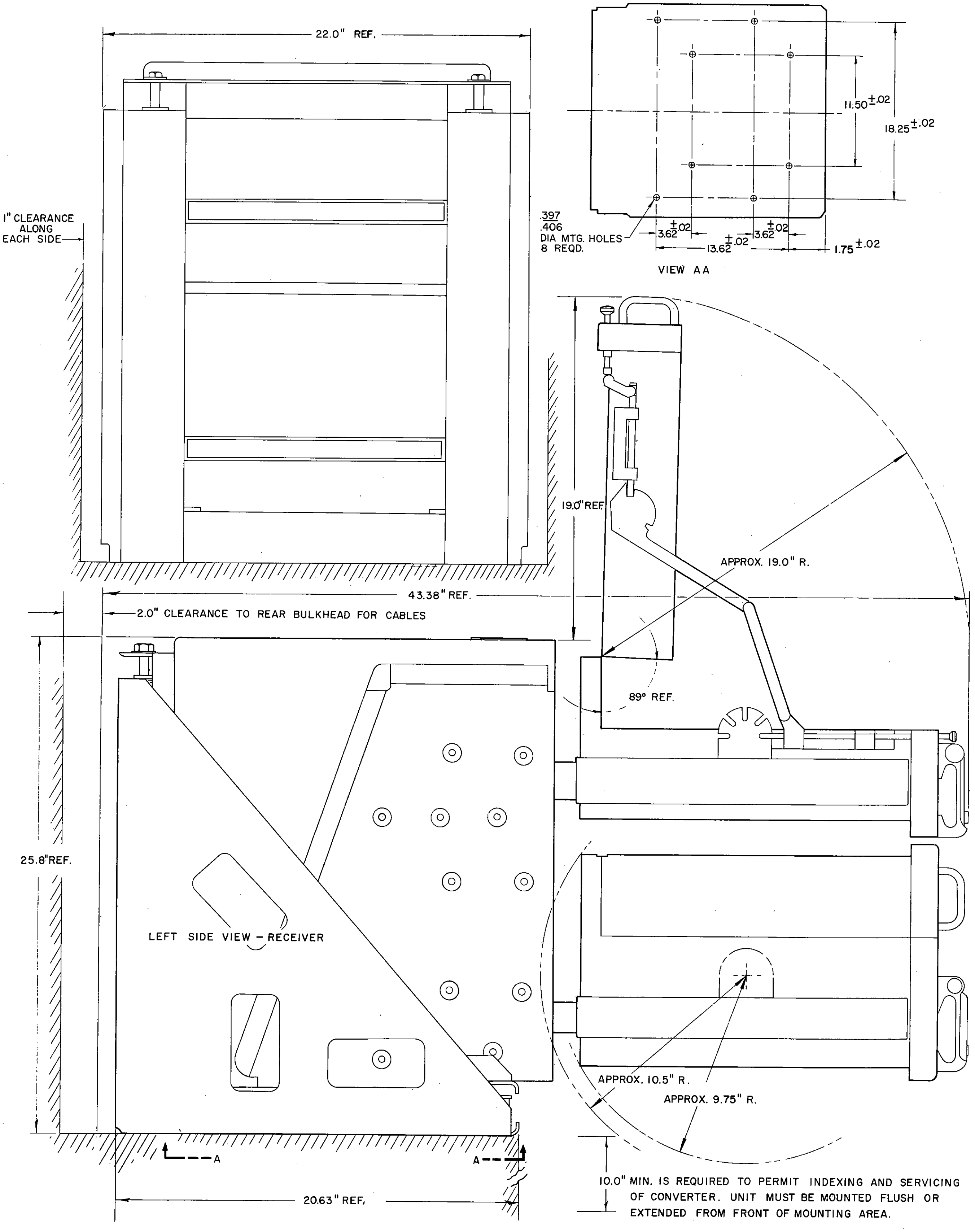

*Figure 2-1. Radio Receiving Set AN/WRR-2A, Outline Drawing*

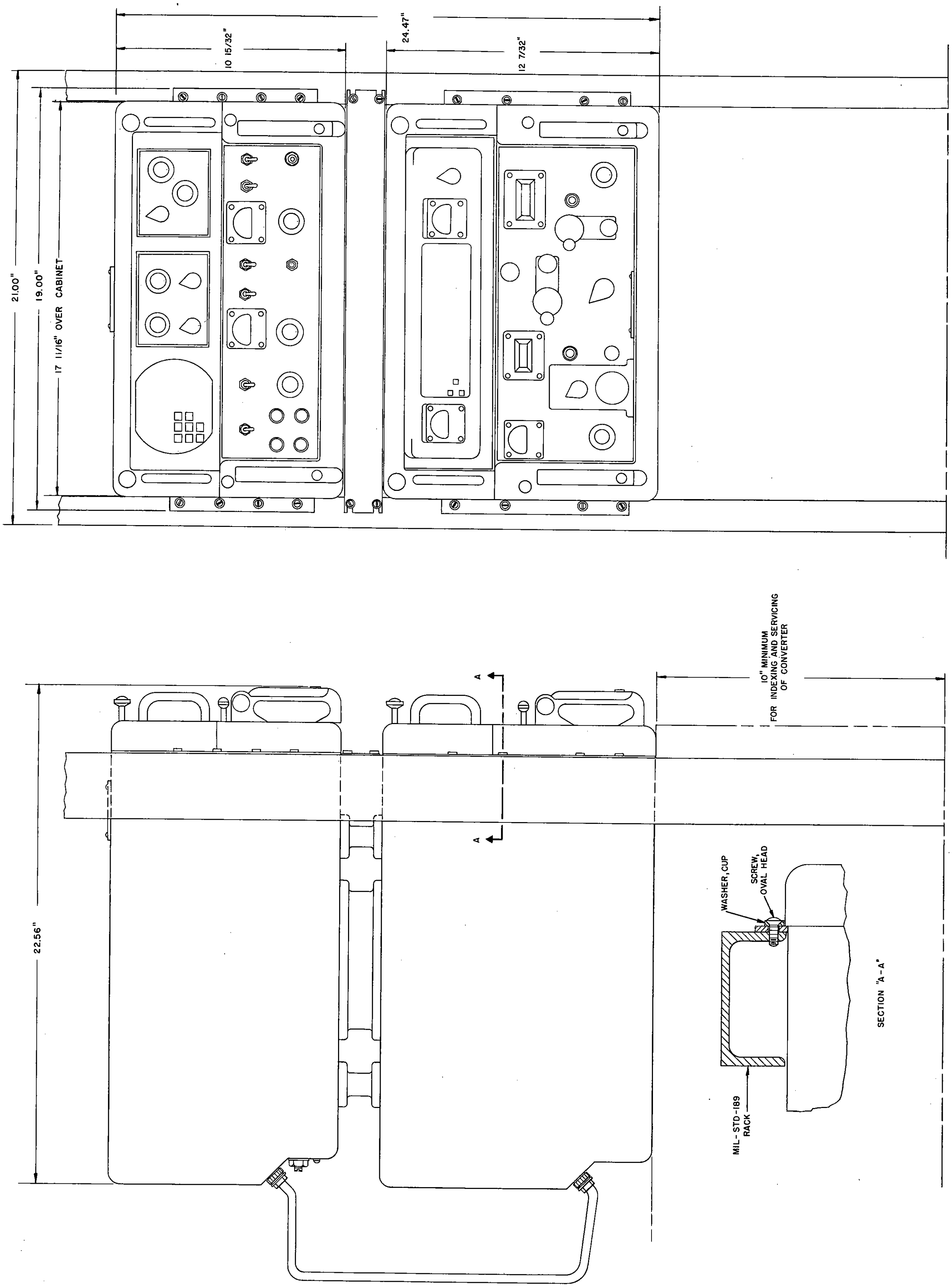

*Figure 2-2. Radio Receiving Set AN/FRR-59A, Outline Drawing*

ing the cabinets to the relay rack, adding the panel filter strip, and completing the necessary cable connections. Because the receivers are shipped assembled, it may be necessary to separate the receiver cabinets before moving them to the final installation site (see paragraph 2-1*d*).

## WARNING

For safety of personnel, cabinet must be grounded. For AN/WRR-2A receiver, mounting bolt (see figure 2-7) grounds to a metal table. A wood table will require a ground wire. For AN/FRR-59A receiver, flange plates ground cabinet to rack which in turn must be grounded.

*a.* CABINET ASSEMBLY AND DISASSEMBLY.— Disassembling the AN/WRR-2A receiver cabinets involves removing the drawers, then removing the cabinet side braces, and finally separating the cabinets. The procedure for disassembling the AN/FRR-59A receiver cabinets is similar, the main exceptions being the addition of five spool-shaped spacers and a panel filler that goes between the receiver cabinets and the exclusion of the cabinet side braces.

(1) REMOVAL AND REPLACEMENT OF DRAWERS.—Drawers must be removed before the cabinets can be assembled or disassembled. Procedures for opening, indexing, removing, and replacing drawers are included.

*(a)* OPENING AND INDEXING DRAWERS. (See figures 2-3 and 2-4.)

*1.* To open either drawer, use the hand release levers on the lower converter and lower demodulator decks.

*2.* Raise the handle locking buttons on the lower portion of the handles and pull the handle release levers outward to eject the drawer.

*3.* Grasp the handles and pull the drawer out on its slides. The drawer will lock in position when fully extended.

*4.* To index the drawer, pull out the index release knobs and use them to lift the drawer, releasing the knobs when the drawer is at an index angle of 45° or 90°.

*5.* To lower the drawer, pull out the index release knobs and lower the drawer to its regular level position.

*6.* To close the drawer, press the index release knobs and push the drawer in by the handles. With the drawer closed, press the handle release levers down to lock the drawer in place. Slide the handle locking buttons down to lock the handle release levers.

*(b)* RAISING UPPER DECKS.

*1.* To lift either the upper converter or upper demodulator deck from the extended drawer, grasp the handles of the upper deck and press in on the upper deck-release knobs, just above the handles.

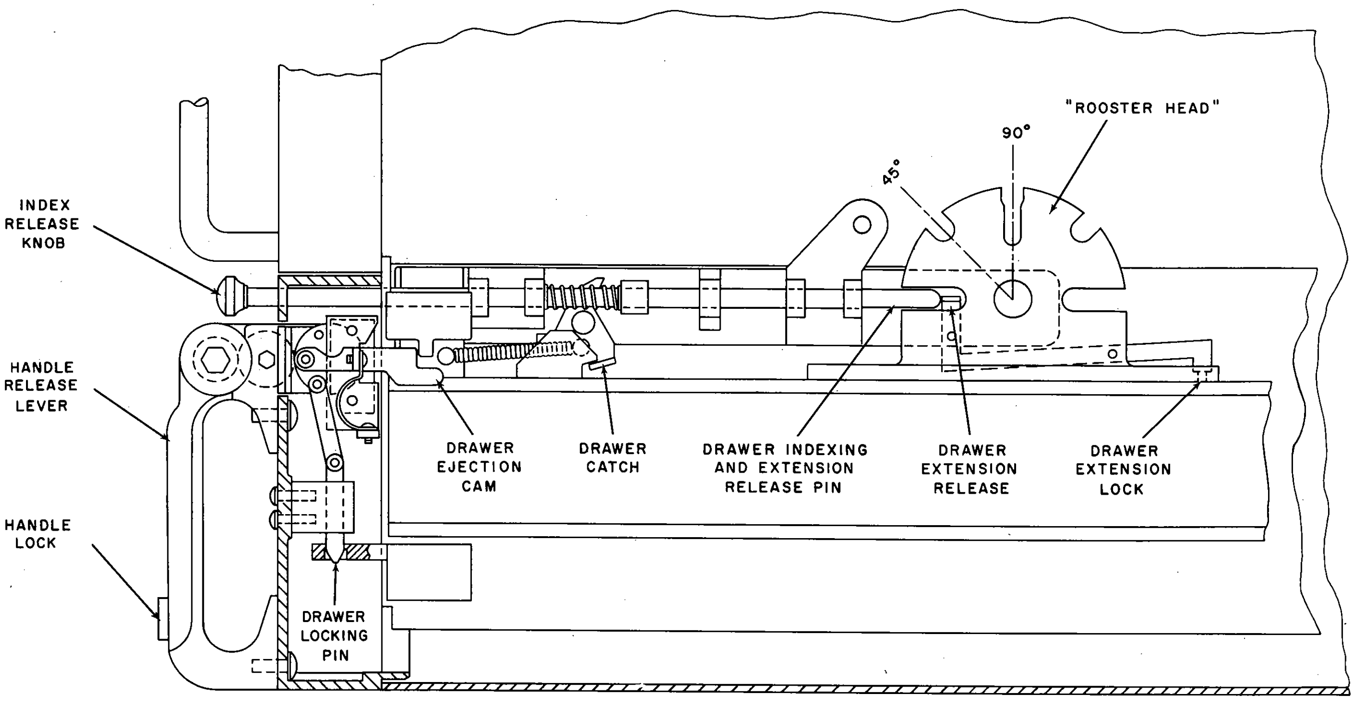

*Figure 2-3. Drawer-Operating Mechanism*

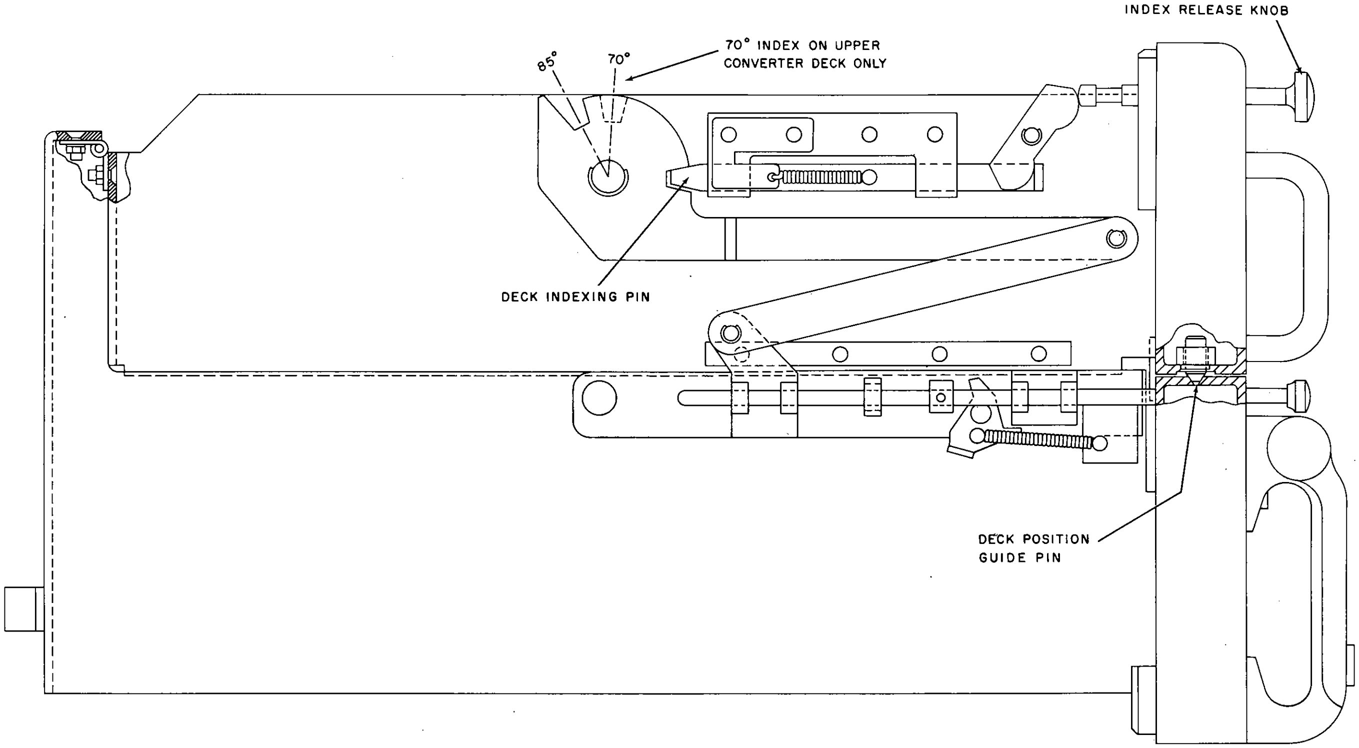

*Figure 2-4. Deck-Operating Mechanism*

*2.* Lifting by the handles will place the upper deck at the desired index angle. The upper converter deck will index first at an angle of 70° to avoid striking the receiver panel. When the drawer is removed from the cabinet it is possible to index the upper converter deck to 85°. The upper demodulator deck will index only at an angle of 85°, whether extended or removed from the cabinet.

*3.* To lower the upper deck, hold the handles firmly while pressing the upper deck release knobs. The deck will then fold down and lock in its normal level position.

### (*c*) REMOVING AND REPLACING CONVERTER DRAWER.

*1.* Open the drawer and extend it to the end of the slide.

*2.* Remove the locking blocks at each pivot rooster head.

*3.* Index the drawer at 45°; remove the twist-lock ac power plug from the rear of the drawer and allow the ac power cable to retract into its housing.

*4.* Index the drawer at 90°, then lift it straight up until the drawer pivot pins are clear of the grooves. Then tilt the drawer forward to clear the upper drawer panel and remove.

*5.* To replace the converter drawer, lift it to place the pivot pins in the grooves of the rooster head. Then hold the drawer vertically and lower it into place.

*6.* Index the drawer at 45°. Reach in for the ac power cable; pull the cable out and place the twist-lock ac plug in its receptacle at the rear of the drawer.

*7.* Lower the drawer to its level position and replace the locking blocks at each pivot rooster head.

### (*d*) REMOVING AND REPLACING DEMODULATOR DRAWER.

*1.* Open the drawer and extend it to the end of the slide.

*2.* Lift the upper demodulator deck to lock it in the 85° index position.

*3.* Grasp the power cable pulley; pull it down firmly and remove the power cable. Carefully release the pulley, allowing it to rest at the front of the slide.

*4.* Unlock and remove the power cable connector and pass the power cable through the opening above the cable receptacle.

*5.* Return the upper deck to its level position.

*6.* Remove the locking blocks at each pivot rooster head.

*7.* Index the drawer at 90°; lift straight up until the drawer pivot pins are clear of the grooves, and remove the drawer.

*8.* Replace the drawer by lowering it vertically to place the drawer pivot pins in their grooves. Lower the drawer to a level position and replace the locking blocks. Lift the upper deck and lock it in the 85° index position. Place the power cable connector in its receptacle and lock it in position. Pull down the pulley on its slide and place the power cable over the pulley. Carefully release the pulley to hold the cable in its normal position. Finally, lower the upper deck to its level position and close and lock the drawer.

(2) REMOVING SIDE BRACES (FOR AN/WRR-2A ONLY).—As shown in figure 2-5 each of the two side braces is affixed to the joined cabinets by eleven ¼-inch hex-head screws. A lock washer and a plain washer accompany each screw. Detach these screws to free the brace from the cabinet side, saving the hardware for reassembly.

(3) SEPARATING THE CABINETS.

*(a)* RADIO RECEIVING SET AN/WRR-2A. The cabinets are joined by eight screws with accompanying nuts and lock washers. Four ¼-inch hex-head screws pass through circular spacer blocks at the four corners. Four ¼-inch plain screws pass through a ring spacer at the center. Detach these fasteners and lift the upper cabinet from the lower, saving all hardware.

**Note**

Each corner spacer is fastened to the bottom of the upper cabinet by two screws. The central spacer is similarly attached by four screws. These screws have no nuts and should be left in place.

*(b)* RADIO RECEIVING SET AN/FRR-59A.—The cabinets used for the AN/FRR-59A are identical to these used in the AN/WRR-2A. In the AN/FRR-59A receiver the cabinets are separated by five spool-shaped spacers (see figure 2-2). The small spacers are used in the corners of the cabinets while the large one is attached to the central spacer. To separate the cabinets, remove all the screws that attach the cabinets to the spool-shaped spacers.

(4) REASSEMBLY.—To reassemble the cabinet structure, reverse the foregoing process.

(5) REMOVAL AND REPLACEMENT OF BLISTERS.—A subassembly in the form of a blister is attached to the rear of each cabinet by sliding snap fasteners. Connectors for external and interconnecting cabling are mounted on the blisters (see figure 2-6). To

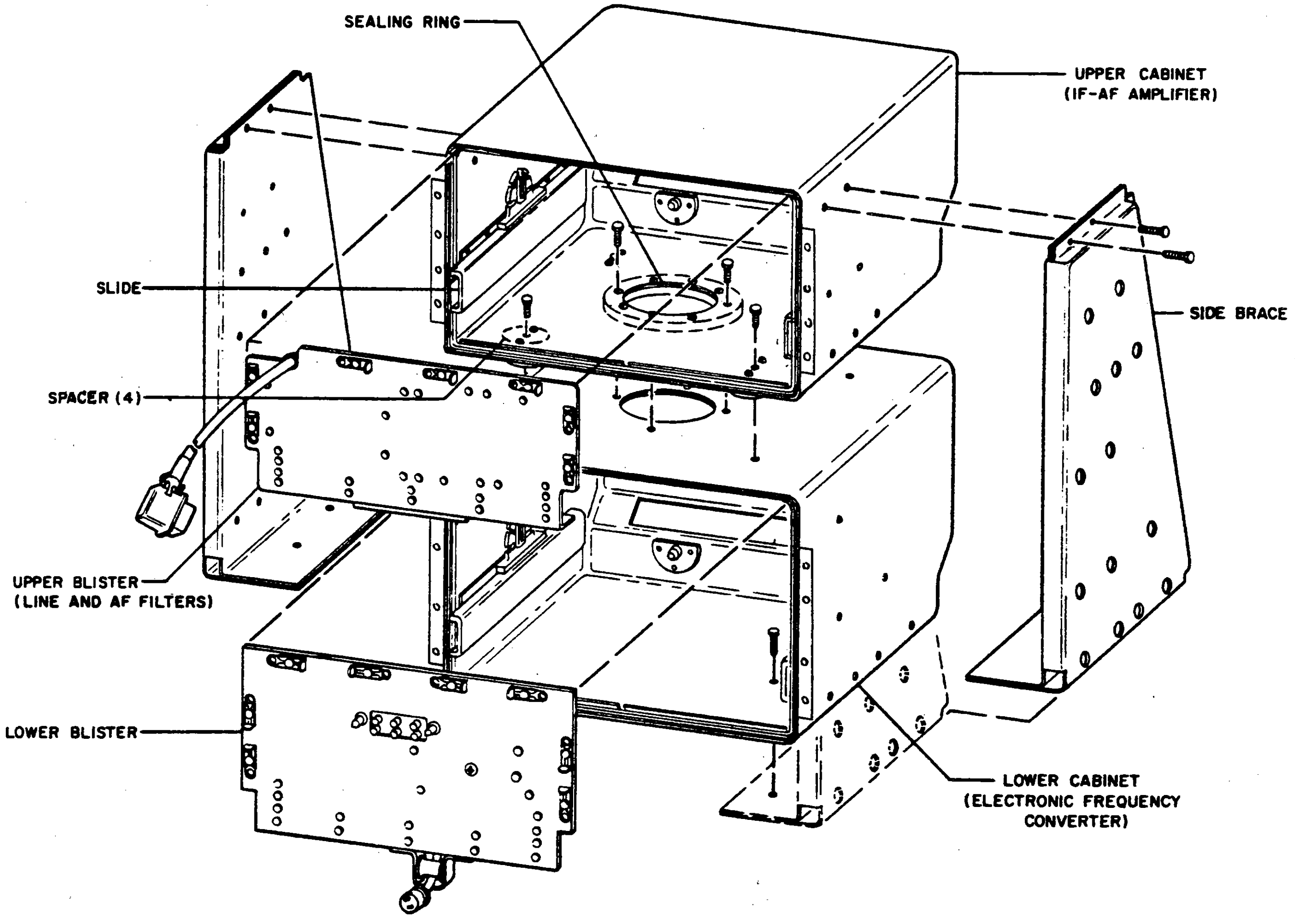

*Figure 2-5. Cabinet Mounting Details*

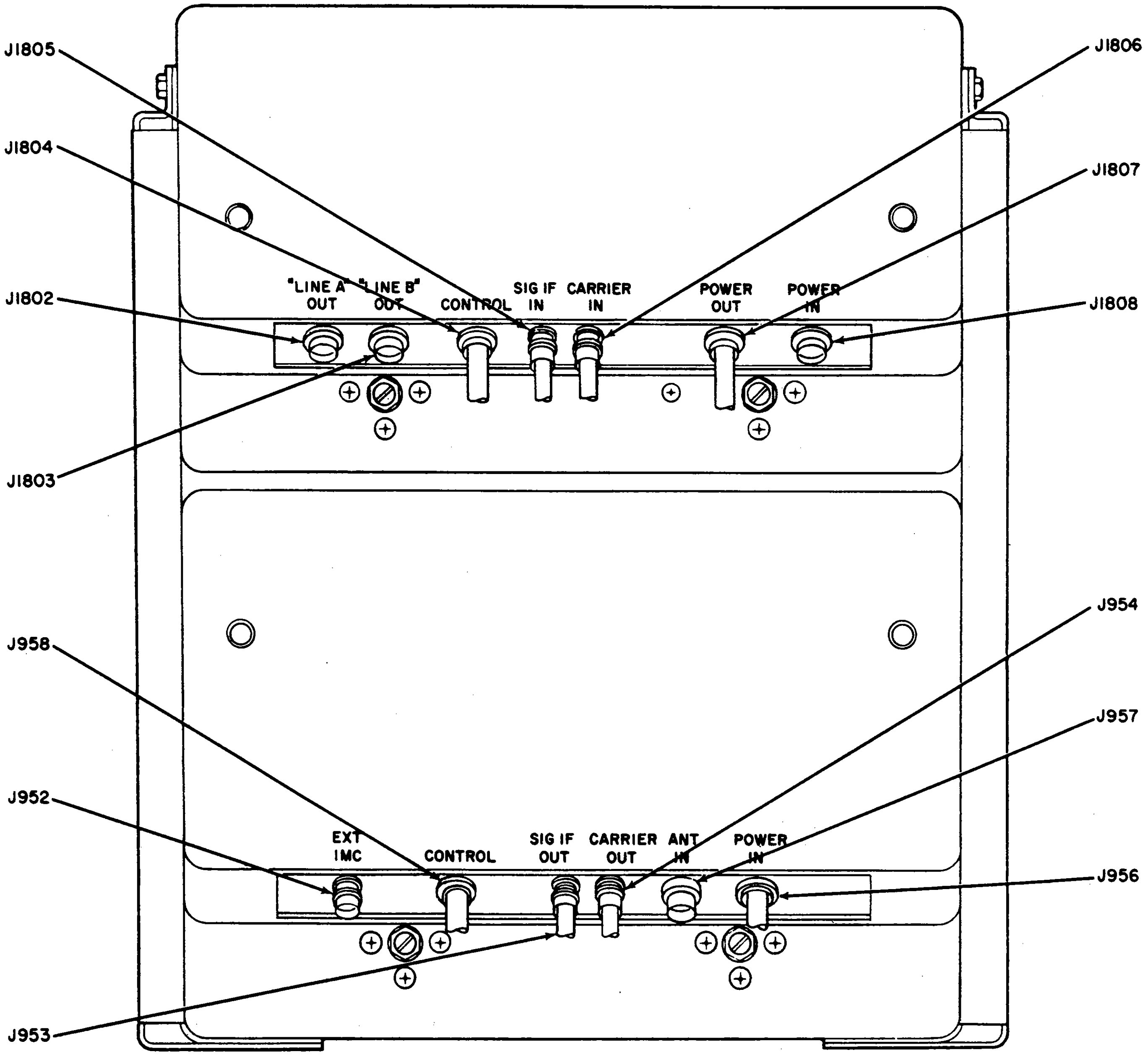

*Figure 2-6. External Cable Connections*

remove a blister, reach in from the front of the empty cabinet, disengage the fasteners and withdraw the blister through the cabinet, taking care not to damage the connectors. Replace by reversing the process.

*b.* MOUNTING CRADLE (FOR AN/WRR-2A ONLY). (See figure 2-7.)—Mounting MT-2293A/WRR-2 consists of a base, a back, and two side gussets for support. It is shipped disassembled in its own carton. Assembly and mounting procedures are as follows:

(1) TABLE LAYOUT.—The base of the mounting cradle has eight holes for attaching the assembly to the supporting table with eight ⅜-inch bolts. Before beginning to assemble the mounting cradle, use the base as a template to locate the holes to be drilled in the table top, as follows:

*(a)* Place the base on the table in the exact location where it is to be mounted. Make certain that the location permits the necessary clearances given in paragraph 2-3*d.* Align the front of the base flush with, or slightly overhanging, the front edge of the table.

*(b)* Using the base as a template, insert a 13/32-inch drill into one of the holes and twist it slightly by hand to spot the location on the table top. Do the same with the other seven holes.

*(c)* Remove the base, and drill the eight holes with a 13/32- or 25/64-inch drill.

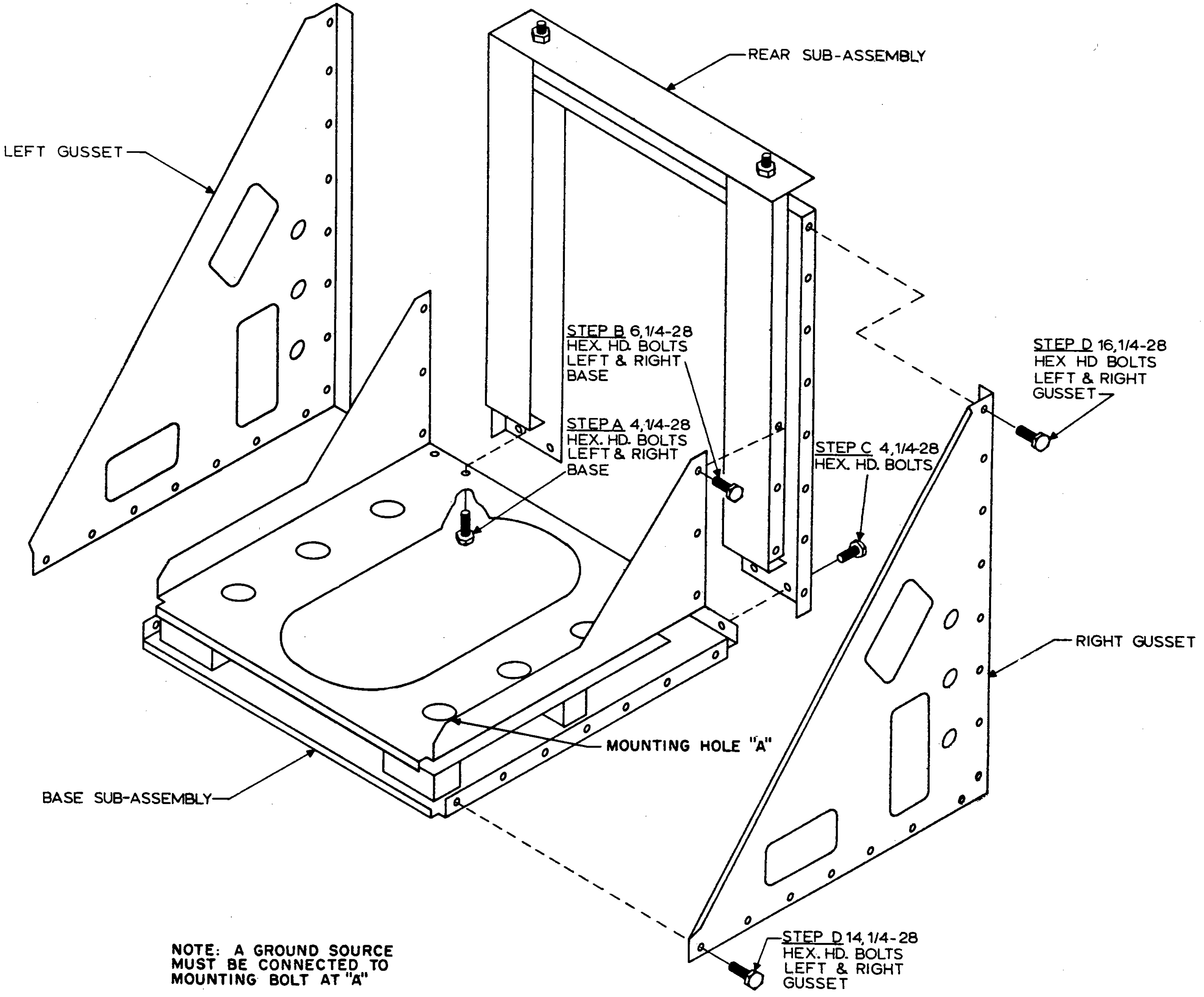

NOTE: A GROUND SOURCE
MUST BE CONNECTED TO
MOUNTING BOLT AT "A"

Figure 2-7. Mounting MT-2293A/WRR-2, Assembly Details (*d*) Do NOT attach the unassembled base to the table.

**Note**

It is possible to locate the holes after the mounting cradle has been assembled, but it is less convenient because the complete assembly is heavier and clumsier than the base alone.

(2) MOUNTING CRADLE ASSEMBLY.—The mounting cradle is intended for permanent assembly with 44 hex-head bolts, 1/4 x 28. Four elastic stop nuts are used; all other bolts enter anchor nuts which hold them securely without the need for lock washers. Assemble in the following sequence:

(*a*) Stand the rear subassembly at the rear of the base, as shown in figure 2-7. Insert four bolts upward through the tray of the base. Install four elastic stop nuts and tighten slightly.

(*b*) Rising from each side at the rear of the base is a small, solid gusset containing three vertical holes. Align these holes with their mating inserts in the rear subassembly and insert three bolts in each side. Hand-tighten.

(*c*) The rear subassembly has two pairs of holes at the lower edge near each end. Align these with their mating inserts in the raised lip at the rear of the base and insert four bolts.

(*d*) Identify the right and left large gussets. Note that the hypotenuse of each gusset has an outward lip, while the vertical edges turn inward to form a partial wrap-around at the rear. Align the holes along the rear and bottom rows in each gusset with their mating inserts in the base and rear subassemblies.

(*e*) Insert one bolt at each end of the bottom row on each gusset and one bolt at each end of the vertical row at the rear of each gusset. The remaining 11 bolts on each side may now be inserted.

(*f*) Tighten all bolts securely and evenly.

(3) MOUNTING.—Attach the assembled mounting cradle to the table with eight ⅜-inch bolts, with a washer at each head and nut. A second nut may be tightened against the first to lock it.

*c.* SECURING THE CABINETS.—The reassembled cabinets, with drawers removed, may now be fastened in place. If rear access at the installation is limited, connect the external and interconnecting cabling as described in paragraph *d* before securing the cabinets. Otherwise, fasten the cabinets with the blisters removed, and make the connections to the blisters (interconnecting cables to one blister only). Run the free ends of the cables through the appropriate cabinet and out the rear, followed by the blisters. After all interconnections have been made, replace both drawers in their respective cabinets.

(1) MOUNTING MT-2293A/WRR-2.—Ten attachment points, tapped at ⅜ x 16 UNC-2B x .75-inch deep, are provided on the mounting cradle. Six points in the base of the cradle receive long screws; four more in the rear subassembly take short screws. Position the cabinets in the cradle, aligning holes in the bottom and rear with the attachment points. Insert screws through their accompanying washers (plain washers first) and through the holes in the cabinet from the inside.

**Note**

The plain washer must be placed directly against the head of the screw, with the lock washer following it.

(2) RELAY RACK MIL-STD-189.—The cabinet structures for the AN/FRR-59A have been adapted for mounting in a MIL-STD-189 relay rack by the addition of flange plates. Select a location within the rack which provides the clearances mentioned in paragraph 2-3*d* and shown in figures 2-1 and 2-2. Fasten the empty cabinet structure in place, using 16 oval-head screws and cup washers provided. See Section A-A of figure 2-2 for the correct method of mounting the individual fasteners. Fasten the panel filler strip between the two cabinets using 4 additional oval-head screws and cup washers. Make the external and interconnecting cable connections as mentioned above and replace the drawers in their respective cabinets.

*d.* CABLE CONNECTIONS.—Although bulk cable is not supplied with the receiver, appropriate connectors (plugs) are furnished for all necessary external cable connections. Interconnecting cables between the converter and demodulator drawers are furnished as complete assemblies. Receptacles for all external and interconnecting cables are located in the recessed panels at the rear of each drawer, as shown in figure 2-6. Table 2-1 contains a summary of the types and functions of all external connecting plugs in their mating receptacles.

(1) ASSEMBLY OF EXTERNAL CABLING.—Figure 2-8 illustrates the method of assembling the JAN-type UG-21/U plug to RG-10/U cable to form the antenna input connection. These instructions are applicable also to the assembly of type UG88C/U plug to RG58C/U cable for use with an external frequency standard. Figure 2-9 shows the assembly method for attaching type AN3106A-16S-5S and type AN3106A-10SL-4S plugs to the appropriate cabling to make up the ac power input and two audio output connectors. Detailed instructions for the assembly of electrical connectors is contained in NAVSHIPS 900171, Chapter 5. Chapter 6 of the same publication gives complete cabling instructions.

The plug provided for the power input cable (P1808) has three female contacts. Contacts A and C connect to the ac line, and contact B goes to ground. The two audio output connectors (P1802 and P1803) have two female contacts each and are ungrounded. The coaxial antenna input connector (P957) contains a male insert for the inner conductor, as does the plug for connection of an external frequency standard (P952).

(2) TRANSFORMER POWER TAPS.—Before operating the receiver, measure with a multimeter the average line voltage of the ship's ac supply. The primary windings of power transformers T901 and T1201, located respectively in the converter and demodulator power supplies, are tapped to permit operation of the receiver from a 60 cps power source of 105, 115, or 125 volts. The taps of the power transformers for these voltages are connected to terminal boards (T901 to TB606, figure 6-5; and T1201 to TB1201, figure 6-8). The connections from power transformer T901 to terminal board TB606 are: (a) terminal 14, common; (b) terminal 15, 125vac; (c) terminal 16, 115vac, and (d) terminal 17, 105vac. The connections from power transformer T1201 to terminal board TB1201 are: (a) terminal 12, common, (b) terminal 13, 105vac, (c) terminal 14, 115vac, and (d) terminal 15, 125vac. The receiver as shipped is connected for 115vac operation (TB606-16 and TB1201-14). If the average value of the ship's ac supply falls between two of the voltages mentioned above, connections for the lower value should be made at both power transformers.

**Note**

When making these connections, do not move the common connections for T901 or T1201. Always move the hot leads (TB606-15, -16, or -17 and TB1201-13, -14, or -15).

A tag showing the voltage value used should be attached to the power input connector at the rear of the receiver when these connections have been made.

## 2-5. INSPECTION AND ADJUSTMENTS.

*a.* GENERAL.—After the equipment is installed and before it is turned over to operating personnel, observe the performance of the receiver in detail and make any necessary adjustments. It is reasonable to expect that these will be minor, but environmental differences between factory and installation site, as well as the handling of the equipment during transit and installation, may set up conditions which will require slight adjustments for optimum performance. All aspects and features of operation must be checked and particular care taken to eliminate any conditions which would lead to abnormal performance.

*b.* INITIAL ENERGIZING OF EQUIPMENT.

**Note**

The location of each control is shown in figure 3-1. Table 3-1 gives a brief description of the function of each control.

(1) Make sure that all external connections are tight.

(2) See that connections to power transformers T901 and T1201 are compatible with the average line voltage, as outlined in paragraph 2-4*d*(4).

(3) Set controls as specified in table 5-2.

(4) Set external line power switches to ON.

(5) Turn POWER ON/OFF panel switch to ON and wait 30 seconds. The MEGACYCLE and KILOCYCLE counters should be illuminated immediately. The ventilation blower will probably not be required during the first hour of operation but should be heard running intermittently thereafter.

**Note**

The receiver will be operable after approximately 30 seconds of warmup, but the crystal oscillator may not reach its designed frequency stability of one part in $10^7$ until after the first hour of operation.

TABLE 2-1. CONNECTORS (PLUGS) SUPPLIED, EQUIPMENT FOR MAKING EXTERNAL CONNECTIONS

| CIRCUIT SYMBOL & TYPE OF PLUG | CIRCUIT WHERE USED | TYPE CABLE | CIRCUIT SYMBOL & TYPE OF MATING RECEPTACLE |
|---|---|---|---|
| P1808<br>AN3106A-16S-5S | 105-125 v, 50-60 cps power input | THFA or equivalent | J1808<br>AN3102A-16S-5P |
| P1802<br>AN3106A-10SL-4S | Line A output to terminal equipment or speaker | DHFA or equivalent | J1802<br>AN3102A-10SL-4P |
| P1803<br>AN3106A-10SL-4S | Line B output to terminal equipment or speaker; audio output to speaker | | J1803<br>AN3102A-10SL-4P |
| P957<br>UG21B/U | 50-ohm antenna input | RG10A/U | J957<br>UG58A/U |
| P952<br>UG88C/U | 1 mc external frequency standard input | RG58C/U | J952<br>UG29C/U |

## INSTRUCTIONS FOR ASSEMBLY

OF AN TYPE UG-21A/U AND UG-88C/U CONNECTORS TO TYPE
RG-10/U AND RG-58C/U CABLE

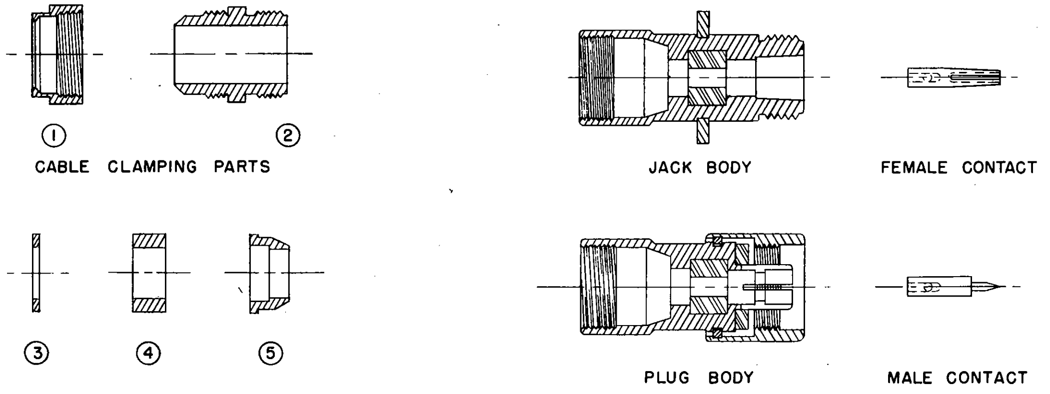

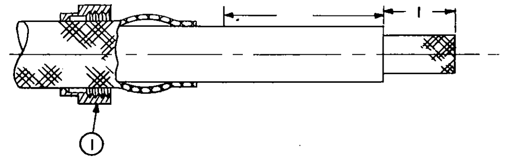

1. SLIDE PART NO. 1 OVER ARMOR AND PUSH ARMOR BACK. CUT VINYLITE OUTER JACKET OFF, SQUARE AND EVEN, ONE INCH FROM END, BEING CAREFUL NOT TO DAMAGE WIRE BRAID.

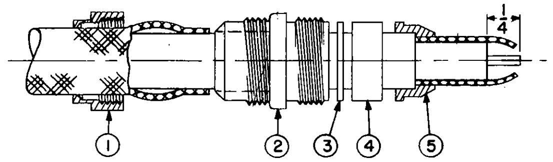

2. PUSH WIRE BRAID BACK AND CUT OFF 1/4" OF DIELECTRIC. PULL BRAID FORWARD AGAIN AND TAPER INWARD AT END (IF NECESSARY FOR REMAINDER OF THIS STEP). SLIDE PART NO. 2 OVER VINYLITE JACKET AND FOLLOW WITH PARTS NO. 3, 4, AND 5, MAKING SURE THAT NO. 5 CLEARS ALL BRAID WIRES AND THAT ITS INTERNAL SHOULDER RESTS SQUARELY AGAINST END OF JACKET.

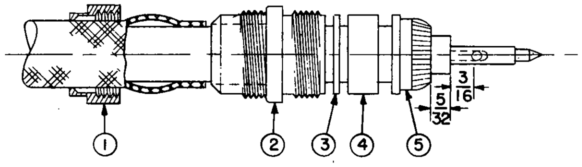

3. UNBRAID ENDS OF WIRE SHIELD AND PULL OUT PARALLEL. THEN FOLD THESE BACK OVER PART NO. 5 AND CUT OFF FLUSH WITH SHOULDER ON THIS PART. CUT OFF DIELECTRIC AGAIN, THIS TIME SO AS TO LEAVE 5/32" OF DIELECTRIC EXPOSED. CUT SQUARE AND EVEN, BEING CAREFUL NOT TO NICK CENTER CONDUCTOR. CUT OFF CENTER CONDUCTOR 3/16" FROM END OF DIELECTRIC AND TIN. SOLDER THIS TIP TO MALE OR FEMALE CONTACT. KEEP SOLDER AND FLUX OFF OF END OF DIELECTRIC, AND REMOVE EXCESS.

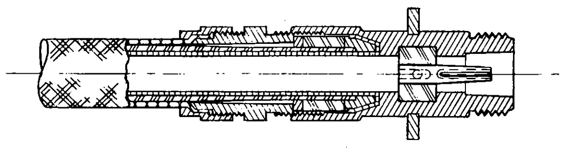

4. INSERT CABLE AS ASSEMBLED, IN PLUG OR JACK BODY AS FAR AS IT WILL GO. PUSH PARTS NO. 4 AND 3 INTO BODY, AND SCREW IN PART NO. 2. HOLD BODY WITH WRENCH TO TIGHTEN, USING CARE NOT TO LET BODY OR CABLE ROTATE. PULL ARMOR FORWARD OVER TAPERED PORTION OF PART NO. 2. CUT OFF EXCESS ARMOR AND UNBRAID ENDS FOR A SHORT DISTANCE. BRING PART NO. 1 FORWARD TO CLAMP ARMOR BETWEEN THE TWO TAPERED SURFACES. BE CAREFUL THAT LOOSE ENDS OF ARMOR WIRES DO NOT EXTEND INTO SCREW THREADS AND JAM.

NOTE:
AN TYPE MX-364A/U CONNECTORS MUST BE USED WITH APPROVED CABLE.

*Figure 2—8. Antenna Input Connector Assembly*

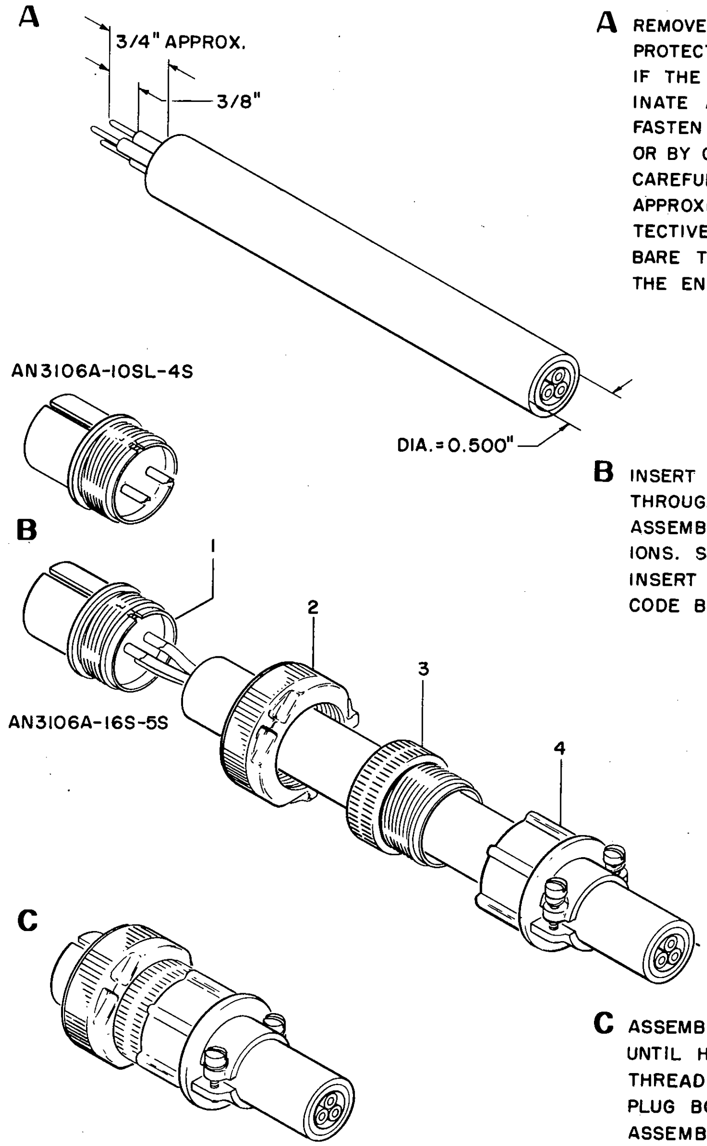

**A** REMOVE APPROXIMATELY 1 INCH OF THE OUTER PROTECTIVE JACKET FROM THE END OF THE CABLE. IF THE CABLE IS ARMORED, ARMOR SHOULD TERMINATE AT THE SAME POINT AS THE CABLE JACKET. FASTEN CUT END OF ARMOR WITH FRICTION TAPE OR BY OTHER SUITABLE MEANS.
CAREFULLY TRIM BACK ANY SHIELDING TO A POINT APPROXIMATELY 1/4" FROM THE END OF THE PROTECTIVE JACKET.
BARE THE EXPOSED CONDUCTORS FOR 3/8". TIN THE ENDS OF THE CONDUCTORS.

**B** INSERT THE CABLE PREPARED AS IN STEP A THROUGH CLAMP (4), AND COUPLING RING (2), ASSEMBLY NUT (3), BEFORE SOLDERING CONNECTIONS. SOLDER CONDUCTORS TO CONNECTIONS IN INSERT OF PLUG BODY (1), OBSERVING COLOR CODE BELOW.

**C** ASSEMBLE BY SLIDING COUPLING NUT FORWARD UNTIL HELD BY RETAINING RING ON PLUG BODY. THREAD FEMALE END OF ASSEMBLY NUT ONTO PLUG BODY, AND FEMALE END OF CLAMP TO ASSEMBLY NUT. TIGHTEN CLAMPING SCREWS TO HOLD CABLE SECURELY.

COLOR CODE CONNECTION DIAGRAM

WIRING SIDE OF INSERTS

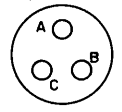

AN3106A-16S-5S

| PIN | COLOR |
|---|---|
| A | BLACK |
| B | WHITE |
| C | RED |

WIRING SIDE OF INSERTS

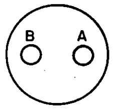

AN3106A-10SL-4S

| PIN | COLOR |
|---|---|
| A | BLACK |
| B | RED |

APPLICABLE CABLES

| NAVY TYPE | |
|---|---|
| TCOP-3, | 3-CONDUCTOR, NO.16, OIL RESISTANT, PORTABLE. |
| THFA-3, | 3-CONDUCTOR, NO.16, HEAT & FLAME RESISTANT, ARMORED. |
| TRIA-3, | 3-CONDUCTOR, NO.16, RESIN INSULATED, ARMORED. |
| TRIP-3, | 3-CONDUCTOR, NO.16, RESIN INSULATED, PLAIN. |

ASSEMBLY OF POWER AND AUDIO OUTPUT CONNECTORS

*Figure 2–9. Power and Audio Output Connector Assembly*

(6) Insert 600-ohm earphones in LINE A PHONES jack.

(7) Rotate R.F. GAIN control clockwise to the maximum clockwise position. Rotate A.M. A.F. LEVEL control clockwise until receiver noise is heard in the phones. Use PHONE LEVEL control to adjust earphone volume to the desired level.

*c.* TUNING PERFORMANCE.—To observe the performance of the tuning circuits, use a compatible signal generator (e.g., AN/URM-25D) to produce the check signal. Because the frequency accuracy of the receiver exceeds that of most signal generators, calibrate the generator *using the receiver as a reference* before beginning the check, or use a primary frequency standard to set the generator. A third choice involves tuning the generator for a maximum signal in the receiver earphones at each frequency checked. At least one frequency within each primary tuning band should be observed, and both continuous and incremental tuning should be checked. Frequencies selected should be at or near the high or low end of each tuning band.

(1) INCREMENTAL TUNING.—The procedure for tuning the receiver by the incremental method is described in Section 3. The main points of this procedure are incorporated in the following performance check:

*(a)* With the TUNING switch in the 0.5 KC position and the Band selector switch in the 2-4 position, the MEGACYCLE counter will initially read 02.0. The KILOCYCLE counter should read 00.0.

*(b)* Adjust signal generator for 30 per cent modulation at 1,000 cps and connect it to the ANT IN jack (J957).

*(c)* Tune receiver to 4 mc.

*(d)* Tune signal generator to receiver frequency. Tuning meter dips (minimum indications) should be produced with a reading of 04.0 on the MEGACYCLE counter and 00.0 on the KILOCYCLE counter.

*(e)* Repeat this procedure using frequencies in each of the four bands. Adjustments of the tuning controls required to produce a meter dip should normally be small. If difficulty is experienced, or if a dip cannot be obtained for any of the selected frequencies, place the TUNING switch in the CONT. position and attempt to tune the receiver by this method. Refer to the trouble-shooting procedures discussed in Section 5, paragraph 5-3*c*. If actual transmitted signals are used for this check, keep in mind that the carrier frequency of the incoming signal may vary considerably from its nominal value. The frequency of the transmitted signal should be measured accurately before apparent discrepancies in the counter readings are attributed to defective tuning circuits or incorrectly set counters. When using the TUNING control and KILOCYCLE counter, it is also important to remember that a dip can be produced at *every* 0.5 kc increment.

(2) CONTINUOUS TUNING.—To receive a frequency having a value terminating in other than a whole or a half kilocycle (for example, 3552.4 kc), use the continuous tuning method. Check this method for at least one frequency, using an actual transmitted signal if possible. If the tuning circuits have performed satisfactorily for all primary tuning bands by use of the incremental method, one frequency should be sufficient to establish the performance of these circuits under continuous tuning. The tuning procedures vary only in the following respects:

*(a)* TUNING switch is set to the CONT. position.

*(b)* The MEGACYCLE counter is set to 03.5.

*(c)* The KILOCYCLE counter is set to 52.4. Tuning adjustments and meter indications are the same, except that a meter dip is not produced at every 0.5 kc.

*d.* RECEPTION MODES.—Observation of single-sideband and AM reception features requires the use of actual incoming signals or a signal generator. One frequency will suffice to check the performance of the IF and AM audio stages, but it is desirable to check reception of as many AM types (CW, MCW, FSK, facsimile) as are available. Single-sideband voice and teletype transmissions should be observed in both upper and lower sideband channels, if possible.

(1) AM.—Using a signal generator (AN/URM-25D) to furnish the incoming signal, check the AM performance as follows:

*(a)* Condition the receiver for A1 operation as shown in table 3-2.

*(b)* Set BAND SELECTOR switch to the 8-16 mc position and tune the receiver to 16 mc.

*(c)* Adjust R.F. GAIN control for a −12 db reading on the LINE A OUTPUT meter.

*(d)* Adjust the signal generator for unmodulated output and connect it to the ANT IN jack (J957).

*(e)* Tune the signal generator to the receiver frequency, and adjust its output to produce a +8 db reading on the LINE A OUTPUT meter, noting the generator output voltage necessary to produce this reading. The voltage should be no greater than 2.5 uv.

(2) SSB.—The performance of the upper and lower sideband channels may be observed as follows:

*(a)* Condition the receiver for A9 operation (see paragraph 3-2*b*(4) and table 3-3), except for UPPER (or LOWER) A.G.C. switches, which should be left off. Insert 600-ohm phones into LINE A PHONES jack. Tune receiver to any convenient frequency.

*(b)* Adjust signal generator for unmodulated carrier output and connect to ANT IN jack.

*(c)* Tune generator until an approximate 1,000 cps tone is heard in the phones.

*(d)* Adjust A.F. LEVEL LINE A for a −12 db reading on the LINE A OUTPUT meter.

*(e)* Adjust the signal generator output for a +8 db reading on the LINE A OUTPUT meter. The generator output voltage necessary to produce this reading should not exceed 4 uv.

*(f)* Shift phones to LINE B PHONES jack and repeat the foregoing steps, except use A.F. LEVEL LINE B and the LINE B OUTPUT meter. Again, the generator output required to produce a +8 reading should not exceed 4 uv.

*e.* OPERATION OF SPECIAL CIRCUITS.—Devices such as the antenna coupler, beat-frequency oscillator, automatic gain control, silencer, and output limiter, though not essential to receiver operation, nevertheless have specific functions, either to protect the equipment or to enhance its operating efficiency. Conduct initial performance checks on these circuits simply by manipulating their controls and observing the degree to which the designed function is performed.

(1) ANTENNA COUPLER.—Moving the ANT. CPLG. switch from NOR to position 1 should result in a slight reduction of signal strength and, hence, a lower output level. The output level should drop noticeably after each successive resetting of the switch to positions 2 and 3.

(2) BEAT-FREQUENCY OSCILLATOR.—The beat-frequency oscillator generates oscillations which, when heterodyned with 80 kc signals in the first AF amplifier-mixer, provide beat note frequencies required for A1, F4, and F1 reception. An auxiliary vernier adjustment (VAR. B.F.O.) permits variations of the beat frequency output up to approximately 6 kc. Check BFO operation as follows:

*(a)* Set the RECEPTION switch for AM operation, and set the appropriate controls for A1 reception as shown in table 3-2.

*(b)* With B.F.O. SELECTOR switch in ON position, tune the receiver to an unmodulated CW (A1) signal, or use a signal generator with unmodulated output. This should result in an audible continuous tone.

*(c)* A zero beat indicates that the applied IF signal is centered in the passband of the final IF amplifier. A beat note at this setting indicates that the applied IF signal may not be centered in the pass-band of the final IF amplifier. The procedures for adjustment of all BFO functional circuits are described in Section 6.

*(d)* Using the same signal, rotating the VAR. B.F.O. control to either side of its 0 (center) position should produce a change in the pitch of the beat note. At 0, no beat note should be heard. Rotation from 0 to either side should produce a rising pitch.

*(e)* F4 and F1 conditions should properly be checked when the receiver is operated in conjunction with facsimile on teletype equipment.

(3) AUTOMATIC GAIN CONTROL.— AGC circuits are associated with each of the three detector-amplifier units, and AGC voltages act on the RF stages of the preselector, the last three stages of the IF amplifier, the tuning meter circuit, and the silencer tube input. Their effect is a regulation of receiver gain in inverse proportion to signal strength. Two time constants suitable for use with various types of AM reception are provided. Table 3-2 presents the settings of the A.M.-A.G.C. TIME CONST. control recommended for each reception type. Two time constants (SLOW and FAST) are provided in each SSB detector-amplifier. With AGC circuits activated and the proper time constant selected, the AF output level should remain fairly constant, once it has been set. If extreme variations in output level are encountered, refer to Section 5, table 5-12, step 6, for AM AGC, table 5-18, steps 6 and 7, for USB AGC, and table 5-26, steps 7 and 8, for LSB AGC.

(4) OUTPUT LIMITER.— With the receiver conditioned for A1 or A2 operation (RECEPTION switch in A.M. position, other controls as in table 3-2), the O.L. THRES. control (potentiometer R1671) can be advanced to provide constant output at a predetermined level. If this constant output is not maintained, refer to Section 5, table 5-12, step 9.

(5) NOISE PEAK LIMITER.— A noise peak limiter is associated with the AM detector. Because it functions only when the B.F.O. is set to OFF, it is not available for other than A2 and A3 signals.

(6) SILENCERS.— Silencing circuits are provided in the AM amplifier unit for use in A3 operation. The operating level of the AM silencer is adjustable through the front panel SILENCER control. AM silencer trouble-shooting procedure is contained in Section 5, table 5-12, step 8.

(7) OPERATION WITH OTHER EQUIPMENT. —The efficiency of the receiver when used with teletype, facsimile, or other terminal equipment should be tested by actual operation. The following points may aid in making the tests meaningful:

*(a)* Make sure that the terminal equipment is in good operating condition before testing.

*(b)* Condition the receiver by making control settings in accordance with table 3-2 or 3-3 as appropriate. Be sure that the RECEPTION, B.F.O., and R.F. SELECTIVITY BW-KCS switches are properly set.

*(c)* When connecting and conditioning the terminal equipment, follow the instructions contained in the technical manuals for such equipment.

*(d)* Allow ample time for warm-up.

*(e)* Operate the connected equipments long

enough to allow them to "stabilize" with regard to each other.

## 2-6. PREPARATION FOR RESHIPMENT.

*a.* EQUIPMENT DISASSEMBLY.— For disassembly, follow in reverse order the assembly procedures given in paragraph 2-4. Observe the following requirements:

(1) Discharge all capacitors with a grounding probe.

(2) RF cables, when coiled for re-shipment, shall not have loops less than 25 or 30 inches in diameter.

Blank

# SECTION 3

# OPERATOR'S SECTION

## 3-1. FUNCTIONAL OPERATION.

Radio Receiving Sets AN/WRR-2A and AN/FRR-59A are high-frequency, superheterodyne receivers employing multifrequency conversion, designed to receive either amplitude-modulated or single-sideband transmissions in the frequency ranges of 2.0 mc to 32.0 mc. They are intended for use in all classes and types of U.S. Navy ships and can be employed for communication between ships and shore stations, ship-to-ship, and between ships and aircraft. Within the designed frequency range, this equipment is capable of receiving the following types of transmissions.

*a.* A1. On-off keyed CW

*b.* A2. On-off keyed tone-modulated CW

*c.* A3. Voice-modulated CW

*d.* A9. Single sideband

*e.* F1. Frequency-shift teletype, four-channel multiplex, and frequency-shift data transmissions.

*f.* F4. Facsimile.

Operation of the receiver is characterized by extreme stability, permitting long periods of unattended operation. A high level of performance can be expected despite adverse environmental conditions.

Several special features of the receiver contribute to its high performance. Any error in frequency resulting from drift in the local oscillator is removed prior to the last conversion by a drift-cancelling circuit. A selection of four tuning bands is provided, and tuning is in 100-kilocycle steps. Through the use of an interpolation oscillator, each 100-kilocycle increment is scanned continuously or in 0.5 kc steps. Counter-type tuning dials permit accurate presetting to a desired frequency.

## 3-2. OPERATING PROCEDURES.

*a.* DESCRIPTION OF CONTROLS. — All controls required for normal operation are located on the front panels of the receiver except the .5 KC/CONT. TUNING control which is located behind the filter cover on the converter drawer. Controls accessible to the operator but not required for normal operation are listed in paragraph 3-2*d*. Table 3-1 contains a description of the functions of all operating controls and devices, and figure 3-1 shows the location of each panel control.

*b.* SEQUENCE OF OPERATION. (See table 3-1.)

**Note**

Before attempting to use this equipment, make sure that all interconnections have been made in accordance with Section 2 (Installation).

(1) STARTING.

*(a)* Set the POWER switch to ON.

*(b)* If the desired frequency ends in other than an even 0.5 kc value, set the TUNING .5 KC/CONT. switch to CONT. If the last digit of the desired frequency is an even 1 kc (,or 0.5 kc,) value (for example, 4237.50 kc), set the switch to the .5 KC position.

*(c)* Set the R.F. GAIN control to the maximum clockwise position.

*(d)* Set the ANT. CPLG. switch to NOR.

### TABLE 3-1. RADIO RECEIVING SETS AN/WRR-2A AND AN/FRR-59A, FRONT-PANEL CONTROLS

| CONTROL MARKING | TYPE OF CONTROL | FUNCTION |
|---|---|---|
| POWER ON/OFF | Switch | Applies or removes primary ac power to or from the complete receiving set. |
| TUNING .5 KC/CONT. | Switch | Selects either continuous frequency tuning or tuning in 0.5 kc increments. |
| R.F. GAIN | Dual potentiometer | Regulates the gain of the RF and 80 kc IF amplifiers. |
| ANT. CPLG. NOR/1/2/3 | Selector switch | Causes increasing attenuation of RF input signals in the 1, 2, and 3 positions; in the NOR position a protective fuse is placed in the circuit, and no attenuation is inserted. |
| BAND 2-4/4-8/8-16/16-32 | Selector switch | Selects the desired primary frequency band and positions the main tuning-indicator counters to register frequencies covered by the selector band. |

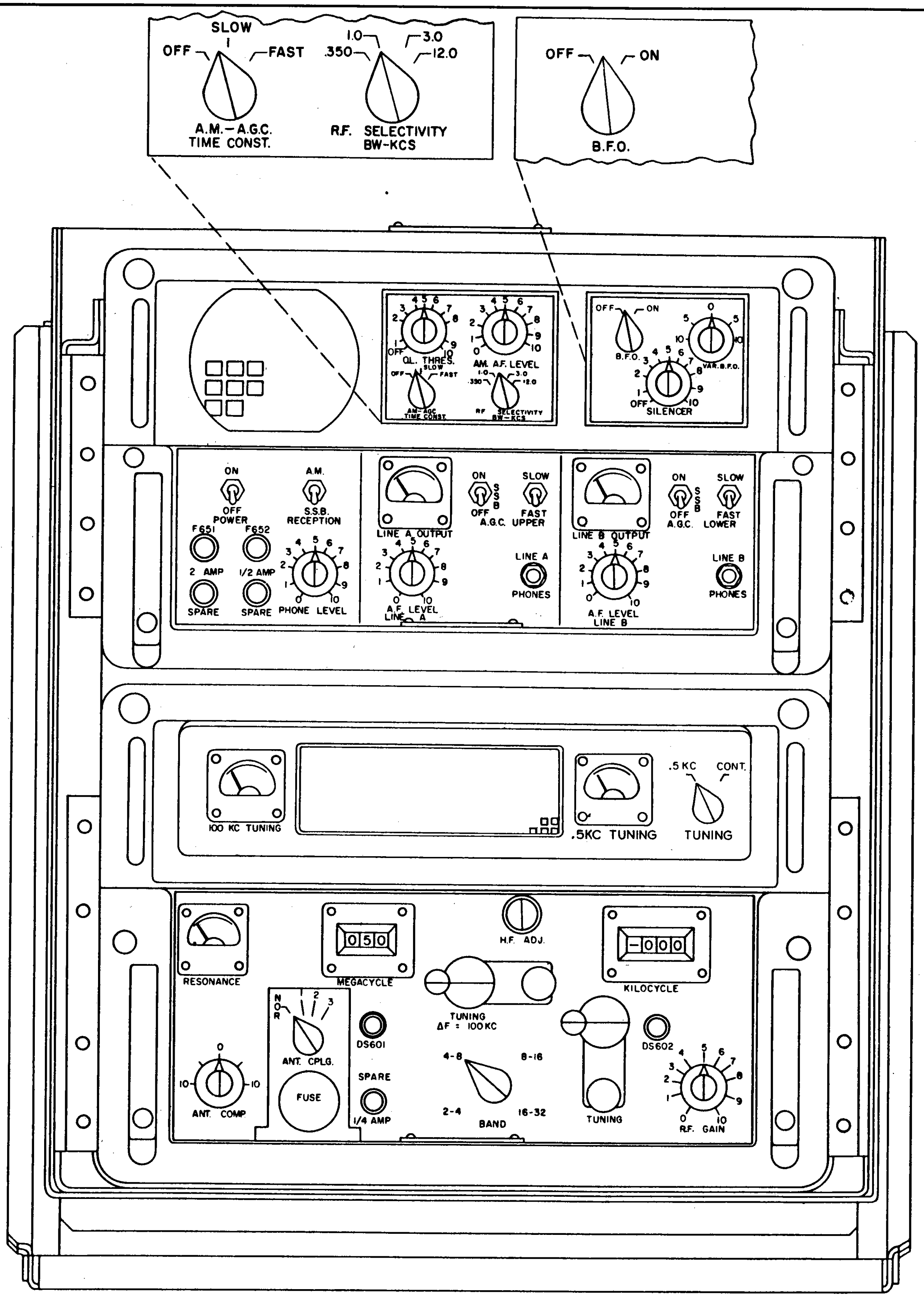

*Figure 3-1. Radio Receiving Sets AN/WRR-2A and AN/FRR-59A, Front View*

## TABLE 3-1. RADIO RECEIVING SETS AN/WRR-2A AND AN/FRR-59A, FRONT-PANEL CONTROLS (cont)

| CONTROL MARKING | TYPE OF CONTROL | FUNCTION |
|---|---|---|
| TUNING $\triangle F = 100$ KC | Variable ganged capacitors | Tunes resonant circuits in steps of 100 kc and selects the correct harmonic from the output of the harmonic generator and amplifier; setting shown on indicator marked MEGACYCLE. |
| MEGACYCLE | 3-digit indicator | Shows setting of the first main tuning control in megacycles; for example: 042 = 4.2 mc. |
| TUNING | Variable capacitor | Depending on the position of the TUNING .5 KC/CONT. switch, provides either continuous or incremental tuning through any selected 100 kc increment of tuning to the next-higher 100 kc increment, within the limits of the primary frequency band in use; setting shown on indicator marked KILOCYCLE. |
| KILOCYCLE | 3-digit indicator | Shows setting of second main tuning control in kilocycles and tenths of kilocycles. |
| 100 KC TUNING | Meter | Indicates tuning increments of 100 kilocycles by a dip (minimum indication) of the pointer. |
| .5 KC TUNING | Meter | Indicates tuning increments of 0.5 kilocycle by a dip of the pointer. |
| RESONANCE | Meter | Indicates resonance for all modes of reception. |
| H.F. ADJ. | Mechanical trimmer | Provides tracking of the preselector circuits with the first conversion oscillator circuits. |
| ANT. COMP. | Variable capacitor | Compensates for variations in input capacitance from one primary frequency band to another. |
| RECEPTION A.M./S.S.B. | Switch | Conditions the receiver for reception of either AM or single-sideband transmissions; removes power from circuits not required for mode of reception selected. |
| SILENCER | Potentiometer | Provides silencer action in the AM amplifier for reception of A3 signals. |
| O.L. THRES. | Potentiometer | Provides continuous adjustment of the threshold of operation of the output limiter. |
| B.F.O. OFF/ON | Selector switch | In the OFF position, BFO circuits are deactivated; in the ON position, BFO circuits and an auxiliary frequency vernier control (VAR. B.F.O. control) are activated, allowing the tuning of the BFO to be varied. |
| VAR. B.F.O. | Variable capacitor | Operates only when B.F.O. switch is in ON position; when activated, it operates to vary the tuning of the BFO and hence the frequency of the AF beat note; with VAR. B.F.O. at zero and with a zero-beat audio output, the applied IF signal is centered in the passband of the final IF amplifier. |

## TABLE 3-1. RADIO RECEIVING SETS AN/WRR-2A AND AN/FRR-59A, FRONT-PANEL CONTROLS (cont)

| CONTROL MARKING | TYPE OF CONTROL | FUNCTION |
|---|---|---|
| R.F. SELECTIVITY BW-KCS .350/1.0/3.0/12.0 | Selector switch | Selects any of four degrees of final IF selectivity bandwidths; has no effect on single-sideband operation. |
| A.M.-A.G.C. TIME CONST. OFF/SLOW/ FAST | Selector switch | Functions only when RECEPTION switch is in the A.M. position; in the OFF position, AGC action is reduced to a minimum; the other positions offer a selection of two time constants. |
| A.M. A.F. LEVEL | Potentiometer | Controls AF signal level in the AM amplifier stage and at line A audio output; functions only when RECEPTION switch is in A.M. position. |
| A.G.C. UPPER ON/S.S.B./OFF | Two switches | In the ON position, supplies AGC to the preselector circuits common to both sidebands, and slow or fast time constants for the AGC in the upper sideband amplifier. |
| A.G.C. UPPER SLOW/FAST | | In the S.S.B. position, AGC is supplied *only* to the upper-sideband amplifier. In the OFF position all AGC voltage is grounded. |
| A.G.C. LOWER ON/S.S.B./OFF<br>A.G.C. LOWER SLOW/FAST | Two switches | Provides AGC voltages on the same basis to the lower-sideband amplifier and preselector circuits in the ON position. In SSB position, only the lower-sideband amplifier is provided with AGC. All AGC voltage is grounded in OFF position. Slow or fast time constants are available. |
| A.F. LEVEL LINE A | Potentiometer | Controls the output level of upper sideband-detected audio when RECEPTION switch is set to S.S.B. position. |
| A.F. LEVEL LINE B | Potentiometer | Controls the output level of lower sideband-detected audio when RECEPTION switch is in S.S.B. position. |
| LINE A OUTPUT | Meter | Indicates AF level in decibels across LINE A OUTPUT terminals. |
| LINE B OUTPUT | Meter | Indicates AF level in decibels across LINE B OUTPUT terminals. |
| LINE A PHONES | Jack | Provides facility for monitoring the output of the AM amplifier when RECEPTION switch is in the A.M. position; with the RECEPTION switch in the S.S.B. position, it monitors the output of the upper-sideband amplifier. |
| LINE B PHONES | Jack | Provides facility for monitoring the output of the lower-sideband amplifier when RECEPTION switch is in S.S.B. position. |
| PHONE LEVEL | Potentiometer | Adjusts the AF signal level applied to LINE A and LINE B PHONES jacks. |

(2) TUNING.—Assume that the desired frequency is 4.235 mc.

*(a)* Set the BAND selector switch to 4-8.

*(b)* Use the △F=100 KC knob to set 04.2 mc on the MEGACYCLE counter.

*(c)* Adjust the TUNING △F=100 KC control for minimum indication of 100 KC TUNING meter pointer.

*(d)* Use the TUNING control to set the KILOCYCLE counter to the last three digits of the desired frequency, that is, to 35.0 kc.

*(e)* Adjust the TUNING control for a minimum indication of the .5 KC TUNING meter pointer.

*(f)* Set the H.F. ADJ. control for a maximum indication of the RESONANCE meter pointer.

*(g)* Adjust the ANT. COMP. control for a maximum indication of the RESONANCE meter pointer.

(3) AMPLITUDE-MODULATED OPERATION.—For the reception of A1, A2, A3, F1, and F4 signals, set the RECEPTION switch to A.M. Table 3-2 sets forth the recommended control settings for the various types of signals.

(4) SINGLE-SIDEBAND OPERATION.—Reception of A9 (single-sideband) signals can be in either the upper or lower sideband. In some cases both sidebands may be used with either identical or different types of information. For example, the upper and lower sidebands could carry two different voice-modulated signals, or one sideband could carry a voice-modulated signal and the other a facsimile signal. Controls for the upper and lower sideband demodulators are identical and can be discussed as one set of controls.

*(a)* Set the RECEPTION switch to S.S.B.

*(b)* Make control settings according to the type of reception desired, as shown in table 3-3.

(5) OTHER OPERATING ADJUSTMENTS.

*(a)* USE OF PHONES.

*1.* AMPLITUDE MODULATION.—Insert the phone plug into the jack marked PHONES LINE A. With the RECEPTION switch set to A.M., the line A audio output is controlled by the A.M. A.F. LEVEL control.

*2.* UPPER SIDEBAND.—The PHONES LINE A jack is also used for this mode of operation (RECEPTION switch in S.S.B. position). The line A audio output is now controlled by the A.F. LEVEL LINE A control.

*3.* LOWER SIDEBAND.—In this case use PHONES LINE B jack and the A.F. LEVEL LINE B control.

*4.* PHONE LEVEL.—The output level to the phones for LINE A and LINE B PHONES jack is controlled simultaneously by the PHONE LEVEL control.

*(b)* USE OF THE ANTENNA COUPLER.—For normal reception conditions, place the ANT. CPLG. selector switch in the NOR position. In this position, a fuse protects receiver circuits from damage if strong signals induce a high voltage in the antenna. If the fuse blows during operation, place the switch in the

**TABLE 3-2. CONTROL SETTINGS, AM OPERATION[1]**

| CONTROL MARKING | TYPE OF RECEPTION SELECTED | | | | |
|---|---|---|---|---|---|
| | A1 | A2 | A3 | F1 | F4 |
| SILENCER | OFF | OFF | ON[2] | OFF | OFF |
| O.L. THRES. | ON[3] | ON[3] | OFF | OFF | OFF |
| B.F.O. | ON[4] | OFF | OFF | ON | ON |
| R.F. SELECTIVITY BW-KCS[5] | 1.0 | 3.0 | 12.0 | 3.0 | 3.0 |
| A.M.-A.G.C. TIME CONST. | OFF | OFF | FAST | FAST | FAST |
| A.M. A.F. LEVEL | 10 (max) | 10 (max) | Adjust as required | Adjust as required | Adjust as required |
| R.F. GAIN | Adjust as required | Adjust as required | 10 (max) | 10 (max) | 10 (max) |

[1] All settings are based on the characteristics of the receiver. Experience will indicate optimum settings.

[2] For A3 reception, increase SILENCER action until desired signal is no longer audible. Then decrease until signal is again heard. When setting for a weak signal, make allowance for fading. If more than one signal is being received, set for the weakest signal.

[3] Set for normal output level during reception.

[4] In ON position, an audio note of 0 kc to 3 kc may be chosen for the beat-frequency output. In A1 position the audio output is a constant 1 kc beat frequency.

[5] Setting is based on normal reception conditions. Use a narrow bandwidth for difficult reception conditions.

## TABLE 3-3. CONTROL SETTINGS, SSB OPERATION

| CONTROL MARKINGS | TYPE OF RECEPTION SELECTED | |
|---|---|---|
| | VOICE MODULATED | FACSIMILE OR TELETYPE |
| A.G.C. UPPER (or LOWER) ON/S.S.B./OFF<br>SLOW/FAST | ON[1]<br>SLOW | ON[1]<br>FAST |
| A.F. LEVEL LINE A (or LINE B) | Set for desired output level as indicated by LINE A OUTPUT (or LINE B OUTPUT meter). | |

[1] Set to ON for normal signals. Turn to OFF if sharper receiver alignment is required. For simultaneous reception in both sidebands (e.g., FSK RATT and voice) use ON position for FSK and S.S.B. position for voice.

1, 2, or 3 position and use the attenuated signal. Distortion caused by strong local transmitter signals may also be eliminated by the use of this control.

(6) AFTER USE.—No provision is made for a "stand-by" condition of the receiver. After or between periods of actual reception the equipment may be allowed to remain energized without risk of damage. The following steps are dictated by good operating practice:

*(a)* Adjust the R.F. GAIN and A.F. LEVEL controls to a medium or low setting.

*(b)* Set the SILENCER or O.L. THRES. control to reduce the noise level at the receiving station.

*(c)* Disconnect the phones, loudspeaker, or terminal equipment.

*(d)* Log any abnormal performance or indication noted during the period of operation.

*(e)* Perform maintenance checks as described in the Maintenance Standards Book (NAVSHIPS 94715.-42) for the equipment.

(7) SECURING THE RECEIVER.

*(a)* Turn the R.F. GAIN and A.F. LEVEL controls fully counterclockwise.

*(b)* Place the POWER ON/OFF switch in the OFF position.

*c.* INDICATOR PRESENTATIONS.

(1) TUNING INDICATIONS.—The principal indications of interest to the operator are those of the MEGACYCLE and KILOCYCLE counters, associated with the main tuning controls, and those of the RESONANCE and TUNING meters. The general function of these and their associated controls is described in table 3-1. Paragraph 3-2*b*(2) outlines the tuning procedure to be followed, using a frequency of 4235.0 kc (4.235 mc) as an example. For a more detailed observation of the various tuning indicators, assume that the desired signal frequency is now 16,252.4 kc (16.2524 mc). The TUNING switch must be set to the CONT. position and the BAND selector switch placed on 16-32. The MEGACYCLE counter will now be positioned to indicate frequencies within this band, but it must be adjusted further to show the exact frequency desired.

*(a)* Rotate the TUNING $\triangle F = 100$ KC control until the digits 1, 6, and 2 appear in sequence from left to right on the three drums of the MEGACYCLE counter. The direction of rotation necessary to make the setting will depend on the relative position within the band to which the drums were first positioned by the BAND selector switch.

*(b)* Observe the 100 KC TUNING meter. Correct setting of the tuning control will be indicated by a deflection of the meter pointer from its full-scale position left towards the zero position. Slight adjustment of the tuning control may be necessary to bring about this dip of the pointer.

*(c)* Rotate the TUNING control until the digits 5, 2, and 4 appear from left to right on the three counter drums of the KILOCYCLE counter. (Actually, there are four drums, the extreme left one functioning only to indicate when the counter setting is above or below the tuning range of the interpolation oscillator.)

*(d)* Figure 3-2 shows the correct settings of the tuning counters for the above frequency and illustrates the accompanying indications of the RESONANCE and TUNING meters.

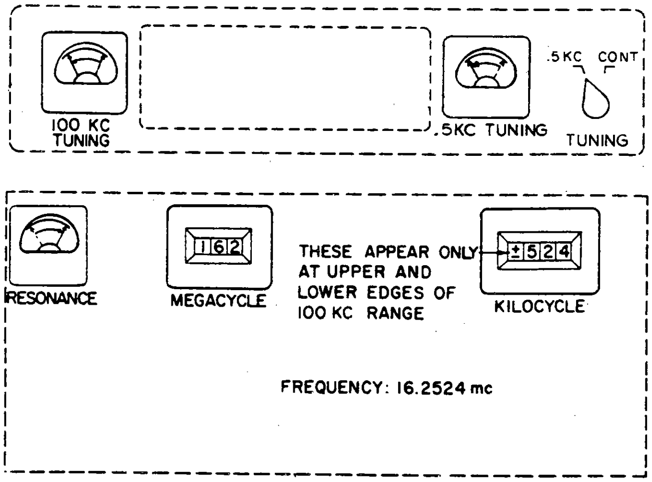

*Figure 3-2. Radio Receiving Sets AN/WRR-2A and AN/FRR-59A, Tuning Counter Presentations*

*(e)* Set the H.F. ADJ. and ANT. COMP. controls in succession, observing the RESONANCE meter for a maximum meter indication at each setting.

(2) OUTPUT-LEVEL METERS. — These two meters, calibrated in decibels from −12db to 0 to +22 db, give a visual indication of the AF output levels across the output terminals. Marked LINE A OUTPUT and LINE B OUTPUT, they respond to adjustments of the A.F. LEVEL LINE A and A.F. LEVEL LINE B controls, respectively, when the receiver is conditioned for SSB reception. If outputs are taken simultaneously from line A and line B, the meters can be used to determine when the output levels are equal. When receiving AM signals, the A.M. A.F. LEVEL control is used to regulate output, which is indicated on the LINE A OUTPUT meter.

*d.* NONOPERATING CONTROLS. — The following controls, which are accessible to the operator, have been installed primarily for the use of technicians in adjusting and calibrating the receiver. Under normal operating conditions, the settings of these controls should not be changed except by a qualified technician.

(1) Master oscillator adjustment control (INTERNAL STANDARD ADJUSTMENT)

(2) Master oscillator logging indicator (INT. STD. LOG)

(3) Master oscillator phase-temperature switch (INT. STD.)

(4) External-internal standard switch (FREQ. STAND.)

(5) Upper-sideband gain adjust control (UPPER GAIN BAL.)

(6) Lower-sideband gain adjust control (LOWER GAIN BAL.)

**Note**

The FREQ. STAND. switch, located under the cover plate of the upper converter deck, must be set to the INT. STD. position before the receiver is operated. The EXT. STD. position should be used only if the internal frequency standard fails, or if an accuracy of better than 1 part in $10^7$ is required.

## 3-3. EMERGENCY OPERATION.

*a.* PARTIAL FAILURE. — Normally, good maintenance procedure requires that electronic equipment be shut down for repairs as soon as any significant defect develops. In an emergency situation, however, loss of the services of the equipment for any length of time may not be acceptable, and a substitute method of operation must be found. This substitute, or emergency method will, in most cases, involve a reduction of receiver capability. If no alternate equipment is available, the lower operating efficiency will have to be accepted. Once the pressing need for the receiver has passed, however, steps should be taken promptly to restore it to normal operation. Subject to the foregoing, the emergency operating procedures listed below are suggested.

(1) ANTENNA COUPLER. — As noted in paragraph 3-2*b*(5)*(b)*, placing the ANT. CPLG. switch in position 1 will renew the signal path in the event that protective fuse F2801 is opened by a high current. A reduction in signal strength must be expected.

(2) RECEPTION OF SSB TRANSMISSIONS WITH A.M. DETECTOR-AMPLIFIER. — In case of failure in either of the single-sideband detector-amplifier sections, the sideband intelligence can still be received by use of the A.M. detector-amplifier, except that simultaneous upper- and lower-sideband reception will not be possible. The following procedural steps will permit reception of one sideband channel:

*(a)* Set the RECEPTION switch to A.M.

*(b)* Place the TUNING .5 KC/CONT. switch in the CONT. position.

*(c)* Adjust the R.F. GAIN control to a low setting.

*(d)* Adjust the A.M. A.F. LEVEL control to a high setting.

*(e)* Using the TUNING control, tune the receiver to the sideband frequency. Slight resetting of the H.F. ADJ. control may also be necessary. At this point the signal heard will be unintelligible.

*(f)* Set the B.F.O. switch to the ON position.

*(g)* Using the VAR. B.F.O. control, tune the BFO until the signal becomes intelligible and normal in pitch.

*(h)* If a teletype signal is being transmitted, the printer must be observed while the BFO is being tuned.

(3) AM RECEPTION WITH SSB DETECTOR-AMPLIFIER. — The upper- or lower-sideband detector-amplifiers can be used also for A3 reception in the event of failure in the AM unit. The following procedure should be used:

*(a)* Set the RECEPTION switch to S.S.B.

*(b)* Set the TUNING .5 KC/CONT. switch to CONT.

*(c)* Adjust the R.F. GAIN control to a low setting.

*(d)* Adjust the appropriate SSB A.F. LEVEL control (A.F. LEVEL LINE A or LINE B) to a high setting.

*(e)* Using the main tuning controls, tune the receiver to the carrier frequency.

*(f)* Readjust the TUNING control until the signal becomes intelligible and normal in pitch. Adjustment of the H.F. ADJ. control may also be necessary.

(4) LOSS OF INCREMENTAL TUNING. — Inability to tune the receiver by means of the incremental tuning circuits requires that the TUNING .5 KC/CONT. switch be placed in the CONT. position. Drift cancellation is not a feature of this tuning method,

and the resultant slight loss of frequency stability may demand more frequent tuning adjustment, especially during reception of SSB signals. This small reduction of stability will occur in any case where continuous tuning is substituted for the incremental method.

(5) LOSS OF AGC VOLTAGE. — Failure of AGC circuits within the receiver will not interrupt the signal flow, and the set should remain operative but subject to strong signal overloading. Silencer action, which is actuated by AGC voltage, will be lost. Manual control of output through the R.F. GAIN and appropriate A.F. LEVEL controls will be necessary. AGC and silencer switches in the affected section should be turned off. It should be kept in mind that, although the AGC circuits in the single-sideband sections operate in combination, the AM and single-sideband AGC circuits cannot be substituted for each other. The RECEPTION switch inactivates these circuits in the section not being used.

## TABLE 3-4. SUMMARY OF OPERATION FOR RADIO RECEIVING SETS AN/WRR-2A AND AN/FRR-59A

| | |
|---|---|
| **1. STARTING THE RECEIVER** | |
| Step 1 | Place the POWER ON/OFF switch to ON position, making certain that the FREQ. STAND. switch is set to INT. STD. |
| Step 2 | If the desired frequency ends in a whole or half kilocycle, set the TUNING .5 KC/CONT. switch to .5 KC; otherwise set it to CONT. |
| Step 3 | Set the R.F. GAIN control to near maximum (clockwise). |
| Step 4 | Set the ANT. CPLG. switch to NOR. |
| **2. TUNING** | |
| Step 1 | Set BAND selector switch to position covering desired frequency. |
| Step 2 | Rotate TUNING △F = 100 KC control until first three digits of desired frequency appear on drums of MEGACYCLE counter. (First digit will be zero if frequency is less than 10 mc.) |
| Step 3 | Adjust TUNING △F = 100 KC control for a minimum indication of the 100 KC TUNING meter pointer. |
| Step 4 | Rotate TUNING control until last three digits of desired frequency appear on drums of KILOCYCLE counter. (Last digit will be zero or five if 0.5 kc incremental tuning is used.) |
| Step 5 | Adjust TUNING control for a minimum indication of the .5 KC TUNING meter pointer, when the receiver is set for 0.5 kc tuning. |
| Step 6 | Set H.F. ADJ. control for a maximum indication of the RESONANCE meter pointer. |
| Step 7 | Set ANT. COMP. control for a maximum indication of the RESONANCE meter pointer. |
| **3. AMPLITUDE-MODULATED OPERATION** | |
| Step 1 | Set RECEPTION switch to A.M. |
| Step 2 | Set other controls as required for type of reception (see table 3-2). |
| **4. SINGLE-SIDEBAND OPERATION** | |
| Step 1 | Set RECEPTION switch to S.S.B. |
| Step 2 | Set other controls as required for type of reception (see table 3-3). |
| **5. STOPPING THE RECEIVER** | |
| Step 1 | Turn R.F. GAIN control fully counterclockwise. |
| Step 2 | Set POWER ON/OFF switch to OFF. |

(6) POWER FAILURES. — Interruption of the primary ac power supply to the receiver can be remedied only by an alternate power source. Most shipboard power distribution systems provide for an alternate power transmission path. An emergency power system, comprising an independent generator, distribution switchboard, and transmission lines to vital equipment, may also be available in larger vessels. The operator must be familiar with the ship's installation and be able to shift quickly to alternate or emergency sources having the same electrical rating.

*b.* OPERATION IN THE PRESENCE OF JAMMING.

(1) RECOGNITION AND IDENTIFICATION OF JAMMING. — Generally speaking, jamming is a deliberate attempt by an enemy agency to prevent the reception of transmitted intelligence. It is a simple operation, involving the emission of a strong signal at or near the frequency of the communication channel. Unusual sounds emanating from a receiver may be caused by jamming, accidental interference from a local friendly station, or by a defect within the receiving equipment. Confusion as to the cause of the sounds may lead the operator to shut down the receiver in the presence of jamming or interference in the mistaken belief that the set is defective. Disconnecting the antenna from the receiver is an easy way to determine whether the sound is being generated by a defective receiver stage. If the sounds continue, the receiver is probably defective.

(2) TYPES OF JAMMING. — Jamming signals are classified broadly as continuous-wave or modulated. Modulated signals may take a variety of forms. A brief description of the two main classifications, and some of the more successful types of modulated signals, is presented in the following paragraphs:

*(a)* CONTINUOUS-WAVE JAMMING. — A steady, unmodulated carrier is often used. This carrier can be made to beat with the carrier of the communication channel, producing a loud, steady tone signal in the receiver headphones. On-off keyed carrier may also be used, involving either random keying or the transmission of actual code characters.

*(b)* MODULATED JAMMING. — A great variety of modulation forms can be used effectively, including music, noise, conversation, and tone combinations. Some of the more efficient forms are as follows:

*1.* SPARK. — This signal is simple, effective, and easily produced. The resultant sound resembles the noise of an electric motor operating with sparking brushes. The signal is broad and may cover a fairly wide band of frequencies.

*2.* SWEEP-THROUGH. — A carrier is swept back and forth across the communication channel frequency at a varying rate. The resultant sound resembles that of low-flying aircraft passing overhead. This signal is also effective over a wide band of frequencies.

*3.* STEPPED TONES (BAGPIPES). — A set of separate tones, repeatedly transmitted in order of first increasing and then decreasing pitch, produces the bagpipe effect.

*4.* NOISE. — Considered one of the most effective forms of jamming modulation, noise is random in both amplitude and frequency. The resultant sound is similar to that produced when the receiver is detuned from a station and the gain controls are set at maximum.

*5.* GULLS. — A quick rise and slow fall of the variable audio frequency produces a sound similar to the cry of sea gulls.

*6.* TONE. — The jamming signal may consist of a single audio frequency of unvarying tone, producing a steady howl in the receiver headphones. The tone may also be varied slowly, producing a howl of varying pitch.

(3) ANTIJAMMING PROCEDURES. — As soon as the presence of jamming is recognized or suspected, immediately notify the superior officer and *continue to operate the receiver.* Continued operation is a basic principle of antijamming techniques, for, if the jammed equipment is shut down, the enemy has accomplished his purpose. The following procedures are based on general communications practice, plus a consideration of the design features and controls of the AN/WRR-2. Tactical considerations and fleet doctrines concerning communications countermeasures must also be applied by responsible personnel and must govern in cases of conflict with this manual.

*(a)* Continue to operate the receiver as outlined in paragraph 3-2*b*.

*(b)* If the jamming signal is very strong in relation to the desired signal, use attenuation positions 1, 2, or 3 of the ANT. CPLG. control. The inserted attenuation will tend to prevent blocking of the receiver RF stages.

*(c)* Set the R.F. SELECTIVITY BW-KCS control to the narrowest bandwidth consistent with the type of reception in use.

*(d)* Detune the receiver very slightly to either side of the desired signal. This may cause some separation of the desired signal from the jamming signal. Use continuous tuning for this procedure. Its effectiveness is dependent largely on the bandwidth of the jamming signal.

*(e)* If the intelligence desired is in the form of A1 signals, place the B.F.O. switch in ON position and use the VAR. B.F.O. control to vary the pitch of the desired signal. The pitch separation may prove helpful in copying the A1 signals.

*(f)* A high setting of the O.L. THRES. control may tend to improve the signal-to-noise ratio during noise-modulated jamming of A1 signals.

*(g)* Vary the R.F. GAIN control. This may reduce the level of the jamming signal enough to permit the weaker desired signal to be heard.

*(h)* Vary the appropriate A.F. LEVEL control. The level of the desired signal may be raised enough to be heard.

*(i)* Keep in mind that the success or failure of the above measures will depend largely on the signal-to-noise ratio between the desired signal and the jamming signal, also on the bandwidth of the jamming signal versus that of the desired signal. A combination of these control settings may work, even though the individual steps were unsuccessful.

*(j)* Single-sideband channels, because of their extremely narrow bandwidth, may prove to be relatively invulnerable to broadband noise-modulated jamming. If conditions permit, and AM reception is effectively jammed, a shift to single-sideband mode should be considered.

*(k)* If the communication channel remains jammed after all possible combinations have been tried, action should be taken in accordance with current doctrine to obtain a shift of operation frequency. If possible, the new frequency should be well outside the apparent bandwidth of the jamming signals.

*(l)* At the first opportunity, make an accurate record of the signal characteristics and apparent effectiveness of the jamming signals, as well as the success or failure of each antijamming measure attempted.

## 3-4. OPERATOR'S MAINTENANCE.

*a.* GENERAL. — Electronic technicians are generally responsible for the maintenance and repair of this receiver. In order to lighten the work load of the technician group, routine items of preventive maintenance which do not require elaborate or precision-type test equipment are normally assigned to the operator. Trouble-shooting and repair of minor defects may also be required of operating personnel from time to time. In order to meet this responsibility, a thorough knowledge of the equipment, including complete familiarity with the function of all controls and the procedures governing their use, is mandatory. A general knowledge of circuit theory should also be acquired, so that the existence, location, and probable cause of any electrical or mechanical failure may be determined promptly. In this manner, minor troubles can often be corrected before they become serious. Under normal operating conditions, however, repairs requiring complex realignments should be accomplished by experienced personnel.

*b.* OPERATING CHECKS AND ADJUSTMENTS.

(1) SHIFTING FREQUENCY. — Repeat all steps of the tuning procedure listed in table 3-4.

(2) CHANGING TYPE OF RECEPTION. — With the RECEPTION switch in A.M. position, set controls for the new type of reception as indicated in the appropriate column of table 3-2.

(3) CHANGING RECEPTION MODE (AM to SSB).—Set the RECEPTION switch to S.S.B. Set controls as shown in table 3-3.

(4) RESONANCE. — The 100 KC TUNING meter should remain in a "dip" once the receiver has been tuned. (With continuous tuning, no dip will be experienced in the .5 KC TUNING meter.) If it becomes necessary to make frequent, or large adjustments to the tuning controls in order to obtain a dip, accompanied by pronounced signal fading, ask for technician services.

(5) OVEN TEMPERATURE. — The INT. STD. PHASE/TEMP. switch (normally in TEMP. position) and the PHASE OR TEMP. meter, both located behind the cover plate of the upper converter deck, are used to indicate the temperature of the crystal oven, or to check the accuracy of the 1 mc crystal. A steady midscale reading should be obtained after 30 minutes of receiver operation with the switch in the TEMP. position. Report full-scale or zero reading to the technician on duty immediately.

(6) CRYSTAL ACCURACY. — The accuracy of the 1 mc crystal oscillator output should be checked daily, provided that a frequency standard with an accuracy of 1 part in $10^8$ or better is available. Use the following procedure to conduct the check:

*(a)* Connect the output cable of the frequency standard, which has been adjusted to produce a 1 mc output, to the EXT 1 mc input jack (J952) on the converter blister at the rear of the receiver.

*(b)* Raise the air-filter cover on the front of the receiver to expose the upper converter deck panel, and unlock the INTERNAL STANDARD ADJUSTMENT control. Make sure that the FREQ. STAND. switch is set to INT. STD.

*(c)* Set and hold the INT. STD. PHASE/TEMP. switch in the PHASE position. Using a stop watch, count the number of beats indicated by deflections of the PHASE OR TEMP. meter which occur in a 10-second interval. (A beat is one full deflection and return of the meter pointer.)

*(d)* If the number of beats observed in 10 seconds is one or less, the crystal output is accurate to 1 part in $10^7$ or better.

*(e)* A beat count of more than 1 indicates need for adjustment. Rotate the INTERNAL STANDARD ADJUSTMENT control very slowly, observing the rate at which beats are occurring. Adjust until the beat count is within the limit prescribed.

*(f)* Release the switch, record the reading of the INT. STD. LOG counter, and lock the INTERNAL STANDARD ADJUSTMENT control. Lower the filter cover and secure it.

*(g)* The frequency standard may be left connected if desired. Instructions for the operation of this equipment should be consulted.

(7) ANTENNA COUPLER.—Placing the ANT. CPLG. switch successively in position 1, 2, and 3 should result in a noticeable decrease in signal strength at each setting.

(8) AUTOMATIC GAIN CONTROL.—When AGC is used, the audio output level should remain fairly constant. Note and report any large variations. Also, check time-constant settings for the type of transmission being received.

(9) SILENCER CIRCUIT.—A silencer circuit is provided in the AM section to keep out background noise during voice reception. Check this operation periodically. Report the reception of background noise and other unwanted signals.

(10) OUTPUT LIMITER.—Normally used during CW and MCW reception, this control should be checked with the R.F. GAIN control set high. Report any appreciable variation from reasonably constant output.

**CAUTION**

Controls and switches should move easily from one setting to another. If a control or switch fails to respond to ordinary finger pressure, consider it mechanically defective and consult a technician. Do *not* attempt to force the movement of a control, either by hand or by the application of a wrench or other tool. Expensive damage is almost sure to result. The tuning controls are equipped with friction locks to prevent inadvertent changes of setting. Unlock these controls before changing their settings.

*c.* ROUTINE CHECK CHARTS.—The Maintenance Standards Book for Radio Receiving Sets AN/WRR-2A and AN/FRR-59A (NAVSHIPS 94715.42) provides maintenance and operating personnel with a systematic and efficient method of checking the equipment and performing routine preventive maintenance.

*d.* EMERGENCY MAINTENANCE.—Operating personnel must expect the possibility of failure during battle or other emergency conditions when technician services are not immediately available. If the need for keeping the receiver is paramount, the operator must be able to locate the source of the trouble, determine its nature, and make repairs. It is not practical to attempt a discussion of every type of failure which may possibly occur. Instead, a general outline of trouble-shooting techniques will be presented to aid the operator in developing a systematic approach to emergency maintenance.

(1) ISOLATING TROUBLE.—The receiver is made up of a series of interconnected functional sections, each of which is designed to perform specific tasks contributing to the operation of the set as a whole. A component failure in one of these sections will usually have an adverse effect on several associated sections, which may in turn affect still others. Depending on the function of the defective part, the result may range in gravity from reduced sensitivity or selectivity to a complete breakdown of the equipment. A haphazard search through all components in all sections is not likely to accomplish much, except by accident. A much more efficient approach involves the isolation of the section in which the trouble has occurred, followed by a detailed examination of that section with the object of pinpointing the defective components. Once these steps have been taken, the problem of repair becomes greatly simplified. Make the following checks before attempting a detailed analysis:

*(a)* Check the position of all controls to ensure that they have not been accidentally moved from operating position.

*(b)* If the set is apparently dead (no frequency counter dial illumination, no meter indications, no audio output), check primary power switches, both on the panel (POWER ON/OFF) and any external line switches. Note whether other equipment fed by the same line is affected.

*(c)* If the antenna is connected through a switch or distribution panel, make sure that such connections have been properly made.

*(d)* Make sure that all external connections to the receiver and interconnections (external) between the converter and demodulator have been made properly.

*(e)* Check all fuses to determine the power circuit affected by the trouble. Do not replace a fuse before making a careful examination of the circuit to make sure that no permanent defect exists.

*(f)* Inspect all terminal boards at the rear of the demodulator and converter drawers for broken or loose connections.

*(g)* Make a general inspection of all internal wiring for broken or short-circuited leads.

*(h)* Inspect all tubes, noting any which are not operating (metal casing cool, filament not lighted).

(2) DEFECTIVE TUBE INDICATIONS.—Several types of electron tube failures present visible evidence to a careful observer. Keep in mind, however, that many other defective tubes will reveal themselves only after having been tested with appropriate measuring instruments. A knowledge of these instruments and their uses can be gained by study of such references as Handbook of Test Methods and Practices (NAVSHIPS 91828A) and Electronic Test Equipment Application Guide (NAVSHIPS 91727). Lacking this knowledge, or when test equipment is not available, the operator must restrict his investigation to a search for visible indications of tube breakdown.

*(a)* Arcing across electrodes may be observed with shield removed. Tubes found in this condition should be replaced.

(*b*) Gassy (soft) tubes are revealed by the existence of a purplish-blue film in the area occupied by the electrodes. These also should be replaced.

(*c*) Tubes having warped or sagging electrodes give an audible indication of their condition. Tap the tube sharply while monitoring the appropriate audio output. Sharp bursts of noise in the headphones indicate that one or more tube elements are loose. Replace the tube with a new one.

**CAUTION**

Before removing any tube from its socket, make sure that primary power has been removed from the equipment. Remove tubes by carefully pulling them straight up from their sockets. Straighten bent pins with a pin straightener before replacing them in their sockets. Be sure to replace each tube in its assigned socket.

(*e*) Test a tube suspected of being defective by replacing it with a new tube. At least one tested tube of each type required by the receiver should be kept readily available for this purpose. This substitution test is often not conclusive. If several tubes in a circuit are defective, replacing only one will not cure the trouble. Replacement of tubes in high-frequency tuned circuits may detune the circuit, even though the design characteristics of the new tube are the same as those of the old one. The receiver must then be realigned. The results of this test should not be used as a basis for discarding a tube. The possibility of broken electrical leads or other failure within the receiver should be explored first. Carefully inspect tubes and their sockets for dirt, corrosion, bent pins, and other visible defects before replacement. Turn over suspected tubes to a technician for complete testing before discarding them.

(3) TROUBLE-SHOOTING GUIDE.—Table 3-5 will help the operator to find and correct minor troubles. In case of a major failure, this guide will help to determine which section or circuit is at fault.

(4) TUBE AND FUSE LOCATIONS.—Illustrations in Section 5 show the locations of all tubes and fuses.

## TABLE 3-5. RADIO RECEIVING SETS AN/WRR-2A AND AN/FRR-59A, TROUBLE-SHOOTING GUIDE

| INDICATION | PROBABLE CAUSE | REMEDIAL ACTION |
|---|---|---|
| 1. Receiver dead; dial lamps do not light; no meter indications. | 1. *a.* POWER ON/OFF switch to OFF. | 1. *a.* Check setting. Turn to ON. |
| | *b.* External power supply (ship's supply) turned off. | *b.* Check other equipment to verify. Have power restored. |
| | *c.* Primary ac power fuses F651 or F652 open. | *c.* Check fuses, located on front panel of demodulator lower deck. Inform technician if new fuses blow as soon as power is applied. |
| | *d.* Faulty external power connection. | *d.* Check primary ac power connection P1803/J1803 in demodulator blister. Tighten connector. |
| 2. Lighted dial lamps but no meter indications, no audio outputs. | 2. *a.* Faulty antenna connection. | 2. *a.* Check antenna connection P957/J957 at rear of converter (see figure 5-75). |
| | *b.* Antenna coupler fuse F2801 open. | *b.* Check fuse F2801 located in holder labeled FUSE below ANT. CPLG. switch knob on lower converter panel. Replace if necessary. |
| | *c.* Defective tubes in preselector. | *c.* Check tubes V51, V101, and V151 in preselector at left rear of lower converter deck. |

### TABLE 3-5. RADIO RECEIVING SETS AN/WRR-2A AND AN/FRR-59A, TROUBLE-SHOOTING GUIDE (cont)

| INDICATION | PROBABLE CAUSE | REMEDIAL ACTION |
|---|---|---|
| | *d.* Defective tubes in IF amplifier. | *d.* Check tubes V501 to V508, located at right rear of lower converter deck. |
| 3. Lamps and meters operate, but receiver apparently dead; no audio output. | 3. *a.* Phones or speaker defective. | 3. *a.* Check by substitution of known good speaker or phones. |
| | *b.* Defect in audio output channel (line A or line B). | *b.* (1) Check output of other channel.<br>(2) Check output connections. |
| | *c.* Defect in AF amplifier. | *c.* Check tubes V1606, V1607, V1608, and V1609, or V1007, V1008, or V1108, V1109 as appropriate, located in upper and lower demodulator decks. |
| 4. Tuning counters set to correct frequency but tuning meter does not indicate; no signal output during incremental tuning. | 4. *a.* Station not tuned in (station transmitter off frequency or defect in incremental tuning). | 4. *a.* Attempt to tune in station using continuous tuning. |
| | *b.* Selectivity too narrow for type of reception. | *b.* Check R.F. SELECTIVITY BW-KCS switch for proper setting. |
| 5. Whistling tone in receiver during A3 reception. | 5. BFO activated. | 5. Check B.F.O. switch. If on, turn to OFF. |
| 6. No tone during A1 reception; only clicks heard. | 6. BFO defective. | 6. Check BFO V1610 and replace if tube is suspected. |
| 7. Signal distortion during attempt to receive A9 signals. | 7. Wrong detector-amplifier in use. | 7. Check position of RECEPTION switch. Make sure that switch is set to S.S.B. |

# SECTION 4
# PRINCIPLES OF OPERATION

## 4-1. OVER-ALL FUNCTIONAL DESCRIPTION.

*a.* GENERAL.—Radio Receiving Sets AN/WRR-2A and AN/FRR-59A are triple-conversion superheterodyne receivers which operate in the frequency range of 2.0 mc to 32.0 mc in four bands. These are:

(1) 2.0 mc to 4.0 mc
(2) 4.0 mc to 8.0 mc
(3) 8.0 mc to 16.0 mc
(4) 16.0 mc to 32.0 mc

The receiver's three detector-amplifier sections provide operation in the following modes:

(1) A1 - On/off keyed continuous wave (CW)
(2) A2 - On/off keyed tone-modulated continuous wave
(3) A3 - Amplitude modulation (AM)
(4) A9 - Single sideband
(5) F1 - Frequency-shift teletype
(6) F4 - Facsimile.

*b.* SYSTEM BLOCK DIAGRAM.—Figure 4-1 is a basic block diagram of the receiver. It shows the functional relationship between the two drawers which comprise the receiver. These are:

(1) Electronic Frequency Converter CV-920A/URR (converter)

(2) Intermediate Frequency-Audio Frequency Amplifier AM-2477A/URR (demodulator).

The converter receives a signal in the 2-32 mc range and converts it to an 80 kc intermediate frequency. It also generates an 80 kc signal for carrier reinsertion. Both signals are applied to the demodulator, the basic functions of which are IF amplification, detection, and audio-frequency amplification. Triple-frequency conversion, frequency-drift cancellation, and incremental tuning are discussed below, since these design features are not generally found in superheterodyne receivers.

*c.* FUNCTIONAL OPERATION.—Figure 4-2 is a block diagram showing the converter and demodulator as separate major units. The main signal path through the various assemblies is indicated by a heavy line.

(1) CONVERTER.—An RF signal from the antenna is applied to the antenna coupler, which provides three degrees of signal attenuation for optimum performance under strong signal conditions. The output of the coupler goes to the preselector, where it is amplified and applied to a mixer. Here it is combined with a locally generated RF signal from the high-frequency oscillator to produce the first IF signal at a frequency between 1,625 kc and 1,725 kc. This frequency is selected by the tunable IF filter and applied to the injection IF amplifier, which in turn produces the 80 kc signal to be applied to the demodulator. The injection IF amplifier performs intermediate-frequency amplification and two frequency conversions—the first from 1,625-1,725 kc to 220 kc and the second from 220 kc to 80 kc.

(2) DEMODULATOR.—In the demodulator the 80 kc filter receives the signal and distributes it to the amplitude-modulated (AM) and upper-sideband (USB) detector-amplifiers. The latter supplies the 80 kc signal to the lower-sideband (LSB) detector-amplifier.

(*a*) AM DETECTOR-AMPLIFIER.—In the AM detector-amplifier the 80 kc signal is amplified and

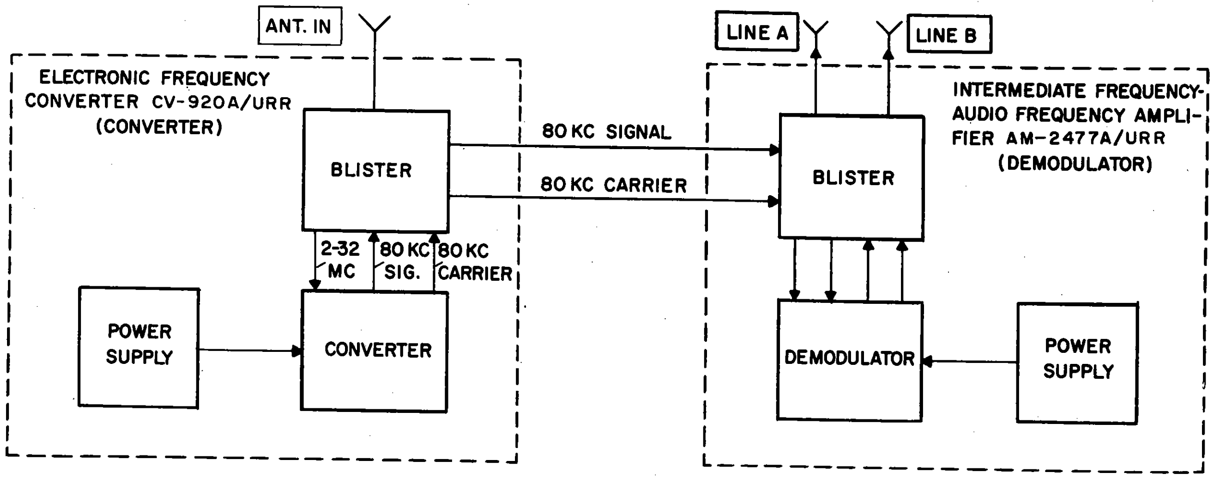

*Figure 4-1. Radio Receiving Sets AN/WRR-2A and AN/FRR-59A, Basic Block Diagram*

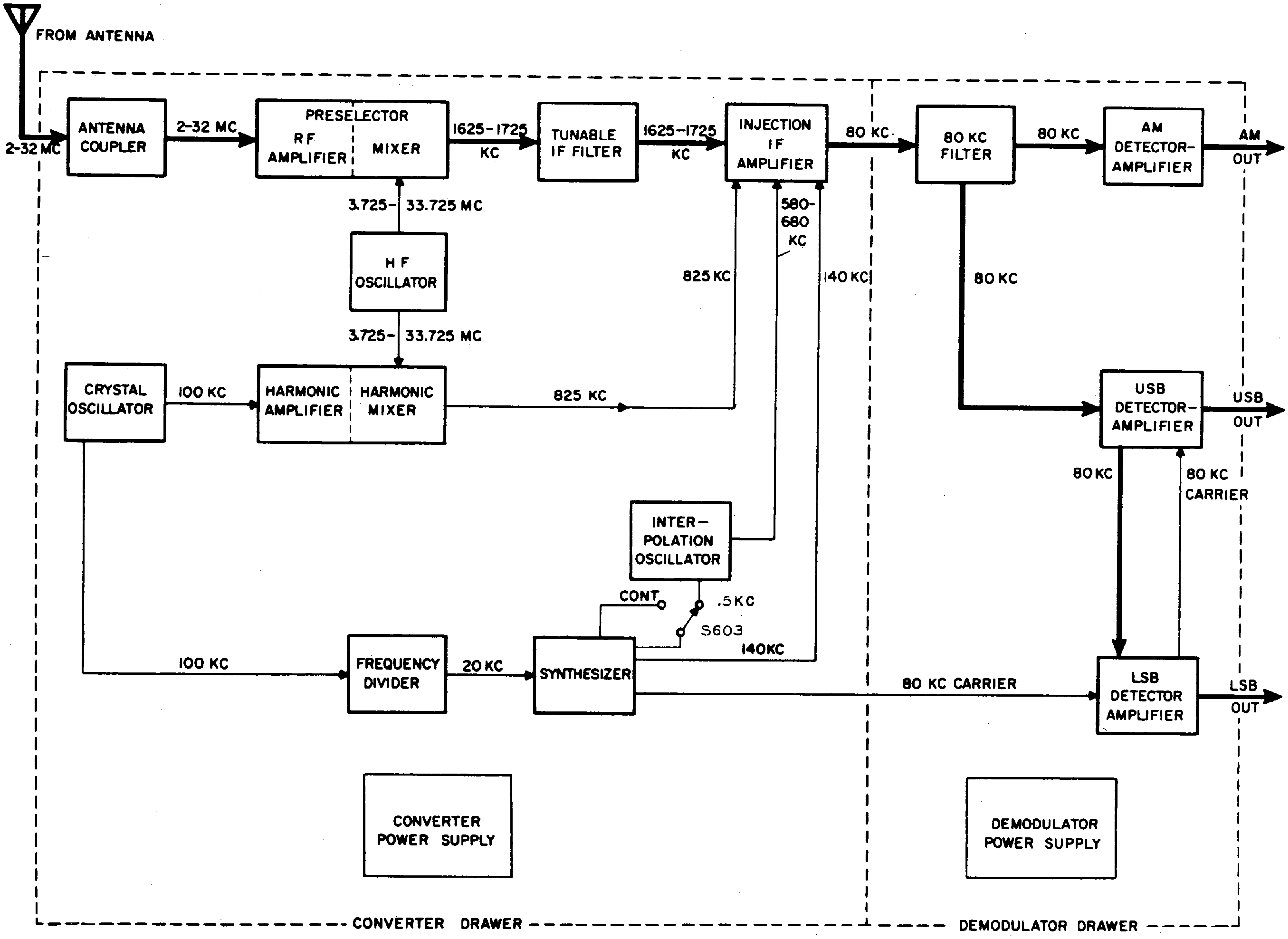

*Figure 4-2. Radio Receiving Sets AN/WRR-2A and AN/FRR-59A, Functional Block Diagram*

detected. Several stages of audio amplification follow. A beat-frequency oscillator (BFO) is also included for reception of CW signals. Audio limiting, silencing, and automatic gain control (AGC) circuits are also included but are not shown in figure 4-2.

(*b*) USB DETECTOR-AMPLIFIER.—In the USB detector-amplifier the 80 kc signal is amplified and applied to a ring-type demodulator where it is mixed with an 80 kc carrier to produce an audio output. A two-stage audio amplifier, and an AGC circuit are also included but not shown in figure 4-2.

(*c*) LSB DETECTOR-AMPLIFIER.—In the LSB detector-amplifier the 80 kc signal is amplified and also applied to a ring-type demodulator, similar to that in the USB. A two-stage audio amplifier, and an AGC circuit are also included but not shown in figure 4-2.

*d.* DETAILED BLOCK DIAGRAM.—Figure 4-3 is a detailed block diagram of the receiver, showing each functional stage of operation and its relationship with other stages. The functional assemblies are identified by dashed lines.

*e.* TRIPLE FREQUENCY CONVERSION.—Figure 4-4 is a block diagram showing the development of the three intermediate frequencies. The preselector RF amplifiers select an operating frequency between 2.0 mc and 32.0 mc and apply it, after amplification, to the first conversion mixer. In the mixer the first injection frequency of 3.725 mc to 33.725 mc, from the high-frequency (HF) oscillator, is combined with the incoming signal to produce the first IF frequency, which is applied to the 1,625-1,725 kc tunable IF filter. The preselector and the HF oscillator are tuned jointly in 100 kc steps, or increments. The tunable IF filter scans these steps and selects the first IF frequency. An explanation of the tuning procedure is given in subparagraph *f* below.

The output of the tunable IF filter is applied to the second conversion mixer, which receives also the second injection frequency of 1,405 kc to 1,505 kc. This second injection frequency is supplied either in 0.5 kc steps or variably from 1,405 kc to 1,505 kc for continuous tuning. The heterodyning action of the second conversion mixer produces the second IF of 220 kc, which is amplified and applied to the third conversion mixer.

The third conversion mixer combines the 220 kc signal with the third injection frequency of 140 kc to produce the third IF frequency of 80 kc. For incremental tuning, the 140 kc injection frequency is obtained from the output of the interpolation oscillator combined with 0.5 kc harmonic frequencies; for continuous tuning it comes directly from the harmonic generator (located in synthesizer section).

*f.* INCREMENTAL TUNING.—Incremental tuning is provided in steps of 0.5 kc over the entire operating range of the receiver—2.0 mc to 32.0 mc. Continuous tuning is also available in this range at slightly lower frequency stability. Figure 4-5 is a basic tuning diagram of the receiver in the incremental mode, tuned, as an example, to 2.105 mc.

In this example, the TUNING △F=100 KC panel control is set to cause the MEGACYCLE counter to read 02.1. This tunes the preselector to receive all signals in the 100 kc range from 2.- mc to 2.2 mc, as signals in the 100 kc range from 2.1 to 2.2 mc, as shown in detail A of the diagram. The relative position of 2.105 mc in this range is shown in a dash-line box. Other RF signals in the 2.1-2.2 mc range will also be present at this stage.

The tuning capacitor of the HF oscillator is ganged with that of the preselector; therefore, setting the MEGACYCLE counter to 02.1 also tunes the HF oscillator (V301) to 3.825 mc, providing the first injection frequency. This signal beats with the selected 2.105 mc in the preselector mixer (V151) to produce a first IF signal of 1,720 kc (3.825 mc—2.105 mc=1,720 kc). The 3.825 mc signal will mix also with any other signals present in the 2.1-2.2 mc range.

The TUNING (KILOCYCLE) control is set to cause the KILOCYCLE counter to read 05.0. This tunes the tunable IF filter to 1,720 kc. The filter also rejects all other signals present in the 2.1-2.2 mc range (see detail B).

When the HF oscillator supplies its 3.825 mc signal to the first mixer it supplies an identical signal to the harmonic mixer (V251). Here the signal is combined with a 3.0 mc pip selected by the tunable harmonic amplifier from the 100 kc frequency spectrum developed by the frequency divider and the harmonic amplifier. The TUNING △F=100 KC control tunes the harmonic amplifier, automatically selecting the pip. Combining the 3.825 mc signal from the HF oscillator with the 3.0 mc pip produces an 825 kc difference frequency, which is applied to the first injection amplifier, which is fix-tuned at this frequency. After amplification the 825 kc is applied to the first injection mixer (V506), where it is combined with a 675 kc signal from the interpolation oscillator (V401).

The interpolation oscillator is tuned, simultaneously with the tunable IF filter, by the TUNING (KILOCYCLE) control. When the KILOCYCLE counter reads 05.0, the interpolation oscillator provides a 675 kc signal. Combining this signal with the 825 kc provides a 1,500 kc signal which is applied to the second injection amplifier and thence to the second conversion mixer (V502). Here the 1,500 kc is combined with the 1,720 kc signal from the tunable IF filter, and the difference frequency of 220 kc is applied to the 220 kc amplifier.

When the interpolation oscillator sends its 675 kc signal to the first injection mixer, it sends an identical signal to the second injection mixer (V806) through the TUNING .5 KC/CONT. switch (S603). The second injection mixer heterodynes the 675 kc with an 815 kc pip from the 1 kc spectrum (see detail E) to produce a 140 kc signal for application to the third injection

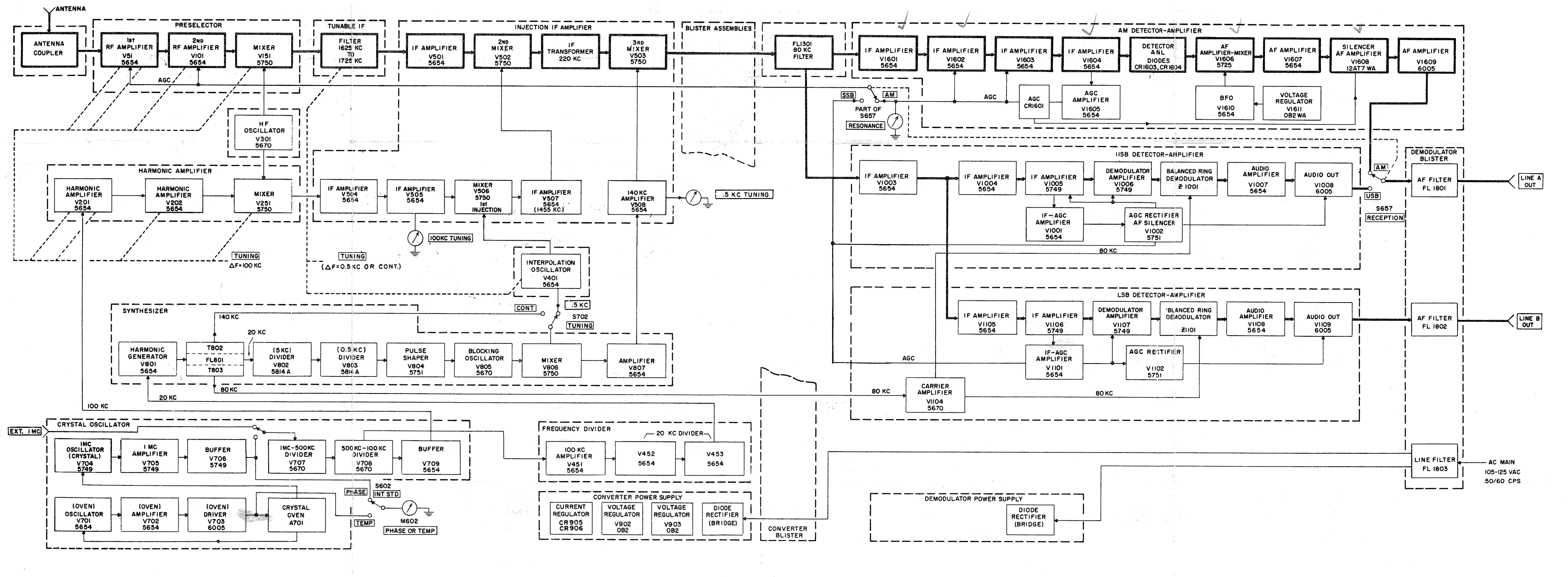

*Figure 4–3. Radio Receiving Sets AN/WRR-2A and AN/FRR-59A, Detailed Block Diagram*

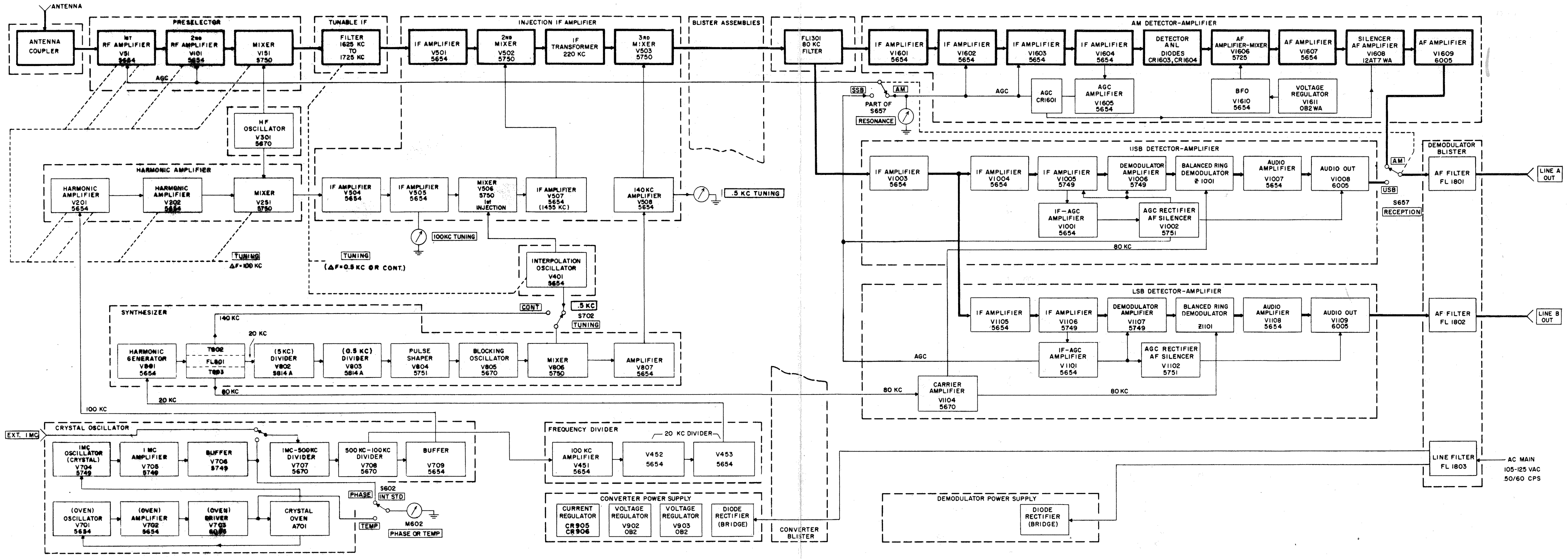

*Figure 4–3. Radio Receiving Sets AN/WRR-2A and AN/FRR-59A, Detailed Block Diagram*

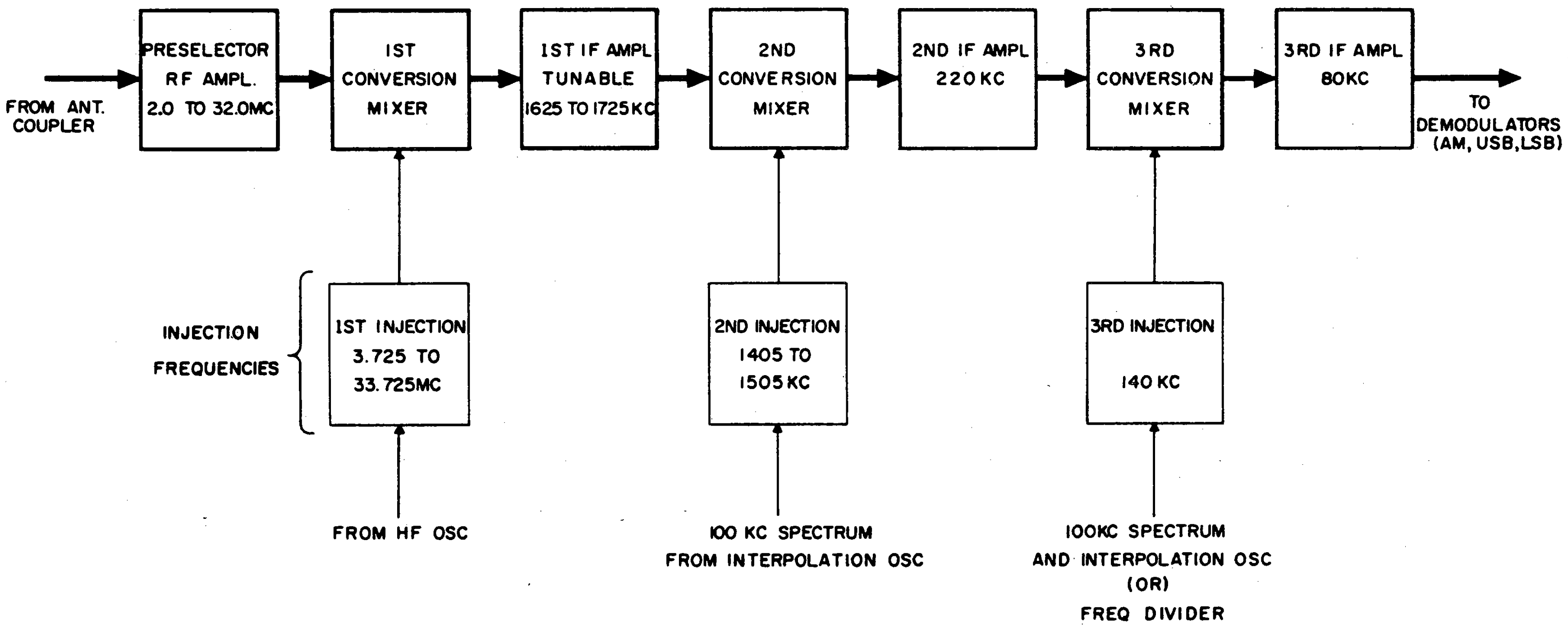

| CIRCUIT | FREQUENCY RANGE | TUNING |
|---|---|---|
| PRESELECTOR | 2.0 TO 32.0 MC | CONT. (100 KC BANDWIDTH) |
| 1ST INJECTION SIGNAL | 3.725 TO 33.725MC | CONT. (USED IN 100KC STEPS) |
| 1ST IF AMPLIFIER | 1625 TO 1725 KC | CONT. (OR 0.5 KC SWEEPS) |
| 2ND INJECTION SIGNAL | 1405 TO 1505 KC | FIXED (100KC BANDWIDTH) |
| 2ND IF AMPLIFIER | 220 KC | FIXED (12 KC BANDWIDTH) |
| 3RD INJECTION SIGNAL | 140 KC | FIXED (CONT. OR 0.5 KC STEPS) |
| 3RD IF AMPLIFIER | 80 KC | FIXED (12 KC BANDWIDTH) |

*Figure 4-4. Radio Receiving Sets AN/WRR-2A and AN/FRR-59A, Frequency Conversion Diagram*

amplifier and thence to the third mixer (V503), where combination with the 220 kc from the second mixer and amplifier produces the third IF signal of 80 kc. This is the signal that is applied to the three detector-amplifiers in the demodulator.

*g.* CONTINUOUS TUNING.—Placing the TUNING .5 KC/CONT. switch in the CONT. position supplies a 140 kc signal from the harmonic generator to the second injection mixer. The 0.5 kc blocking oscillator does not function with the TUNING .5 KC/CONT. switch set to CONT. The interpolation oscillator now provides continuous tuning in each 100 kc segment established by the receiver front end. The output of the interpolation oscillator is not frequency-drift-canceled during continuous tuning, and receiver stability in this mode is subject to interpolation-oscillator frequency-drift.

*h.* FREQUENCY-DRIFT CANCELLATION.—The receiver has two frequency-drift canceling circuits, one for the output of the HF oscillator, the other, used only in incremental tuning, for that of the interpolation oscillator.

(1) HF OSCILLATOR.—This drift-canceling circuit stabilizes the 220 kc output of the second mixer (V502) by compensating for changes in the HF oscillator frequency. As shown in figure 4-5, the second mixer receives two input signals—one (1,720 kc) from the tunable IF filter, the other (1,500 kc) from the second injection amplifier. Both are derived from the 3.825 mc output of the HF oscillator. A change of frequency in the HF oscillator output will affect, inversely by equal amounts, both inputs to the second mixer, thereby eliminating all effects of drift.

(2) INTERPOLATION OSCILLATOR.—The second drift-canceling circuit stabilizes the 80 kc output of the third mixer (V503) by compensating for changes in the output of the interpolation oscillator. As with the other circuit, the third mixer receives two input frequencies—220 kc from the 220 kc IF amplifier and 140 kc from the third injection amplifier, both derived from the 675 kc output of the interpolation oscillator. Any variation in the 675 kc output affects both inputs at V503 inversely in equal amounts, canceling the drift effect.

A more detailed discussion of frequency-drift cancellation circuits is given in paragraph 4-6*b*.

## 4-2. FUNCTIONAL SECTIONS.

In figure 4-3, the detailed block diagram of the receiver, the functional assemblies are identified by dashed lines. The detailed theory of these assemblies is given in the following paragraphs.

## 4-3. ANTENNA COUPLER

*(See figure 4-6.)*

The antenna coupler attenuates high-level signals to prevent distortion from cross-modulation. It also contains a fuse to protect input circuits from damage from extremely high antenna currents. Switch positions 1, 2, and 3 provide attenuations of -20 db, -40 db, and -45 db, respectively. A fourth position, labeled NOR., provides the fuse protection but no attenuation. If the fuse blows, the signal path can be restored instantly via one of the other switch positions.

## 4-4. PRESELECTOR.

*(See figures 4-7 and 4-8.)*

The preselector consists of two stages of RF amplification and the first conversion mixer. Figure 4-7 shows the RF amplifiers operating in band 1 position. (For simplicity, the band switch is not shown. An X indicates where the switching of the band coils occurs.) An RF signal from the antenna coupler is applied to input connector J51 of the preselector. A tank circuit, consisting of RF coil L51, tuning capacitor C601A, antenna compensating (ANT COMP) capacitor C51, and RF coil L58, selects the desired operating frequency. Variable capacitor C601A is a panel control labeled TUNING △F=100 KC. The signal is coupled to the control grid of first RF amplifier V51 through coupling capacitor C59. The output of V51 is developed across RF coil L101 and applied to the control grid of second RF amplifier V101 through coupling capacitor C107. The output of V101 is developed across RF coil L151 and applied to the preselector (first conversion) mixer. AGC voltage developed in the detector-amplifier section of the demodulator is applied to the first and second RF amplifiers through resistors R52 and R102.

RF GAIN control R607 is a dual-section control which adjusts the gain of the first and second RF amplifers, IF amplifers V1602 and V1603 in the AM unit, and V1003 in the USB unit. Section R607A has a reverse log taper for gradual adjustment of gain in the first RF amplifier and for minimizing cross-modulation of this stage by strong signals. R607B has a linear response and changes the gain of the second RF amplifier V101 and IF amplifiers V1602, V1603, and V1003 in direct proportion to the gain-control rotation.

In figure 4-8, preselector mixer V151 receives signals from the HF oscillator at J153 and from the second RF amplifier at J151. Mixer V151 heterodynes these inputs to produce the first IF signal (1625 to 1725 kc) across RF coil L351. This inductor is part of the tunable IF filter.

## 4-5. TUNABLE IF FILTER.

*(See figure 4-9.)*

The tunable IF filter is a continually tuned four-section filter which follows the preselector mixer. Actually the first section of the tunable IF filter contains the plate load of the preselector mixer stage; therefore, the output signal of the mixer is developed in this section of the tunable IF filter. The four filter sections are tuned from 1,625 kc to 1,725 kc by a four-section variable capacitor (C351). This capacitor is ganged to the tuning capacitor of the interpolation oscillator and tunable IF filter by the TUNING (KILOCYCLE) control. The tunable IF filter selects the first conversion frequency from the output of the preselector mixer.

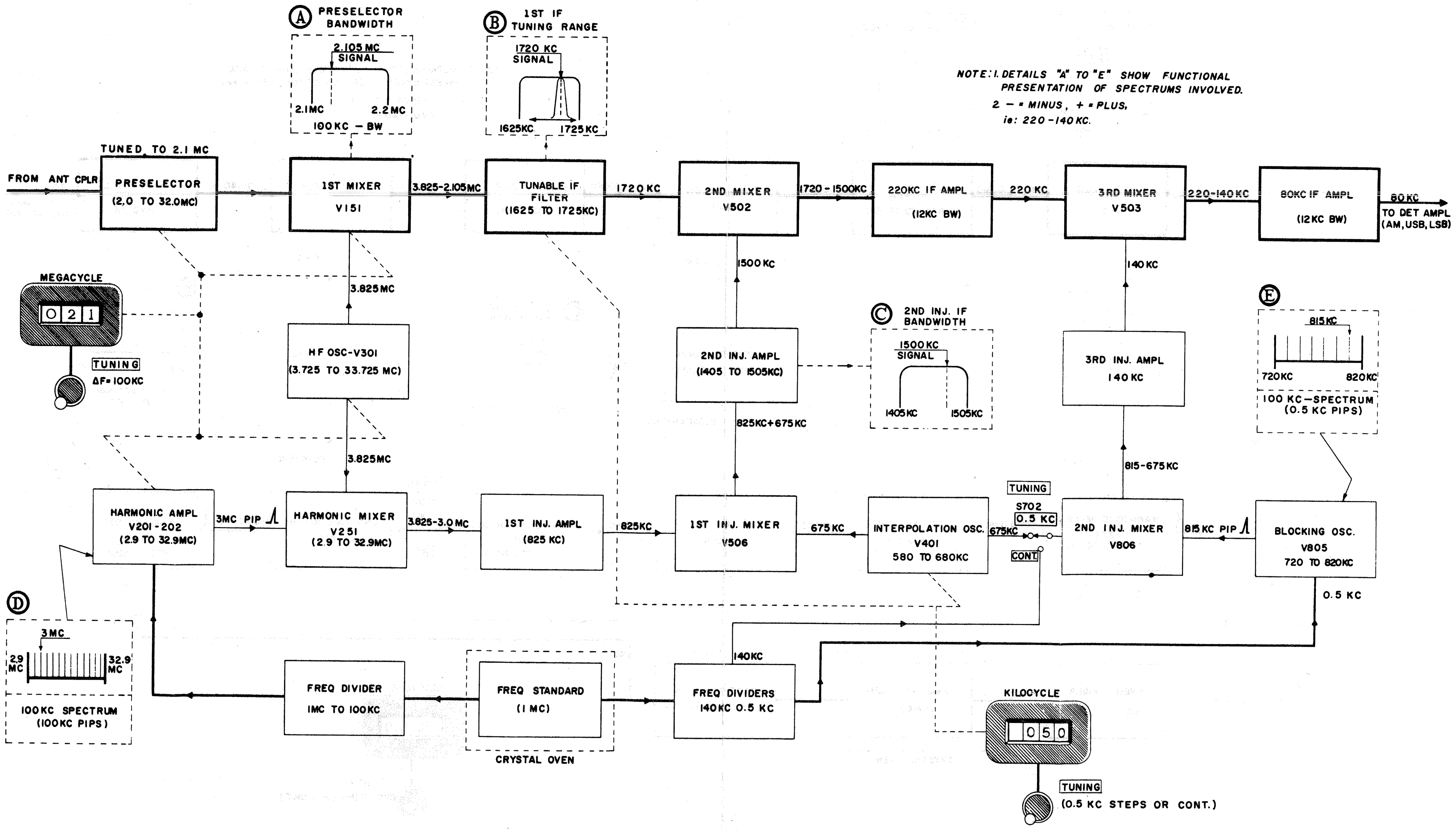

*NOTE: 1. DETAILS "A" TO "E" SHOW FUNCTIONAL PRESENTATION OF SPECTRUMS INVOLVED.*
*2. – = MINUS, + = PLUS,*
*ie: 220 - 140 KC.*

*Figure 4–5. Radio Receiving Sets AN/WRR-2A and AN/FRR-59A, Basic Tuning Diagram*

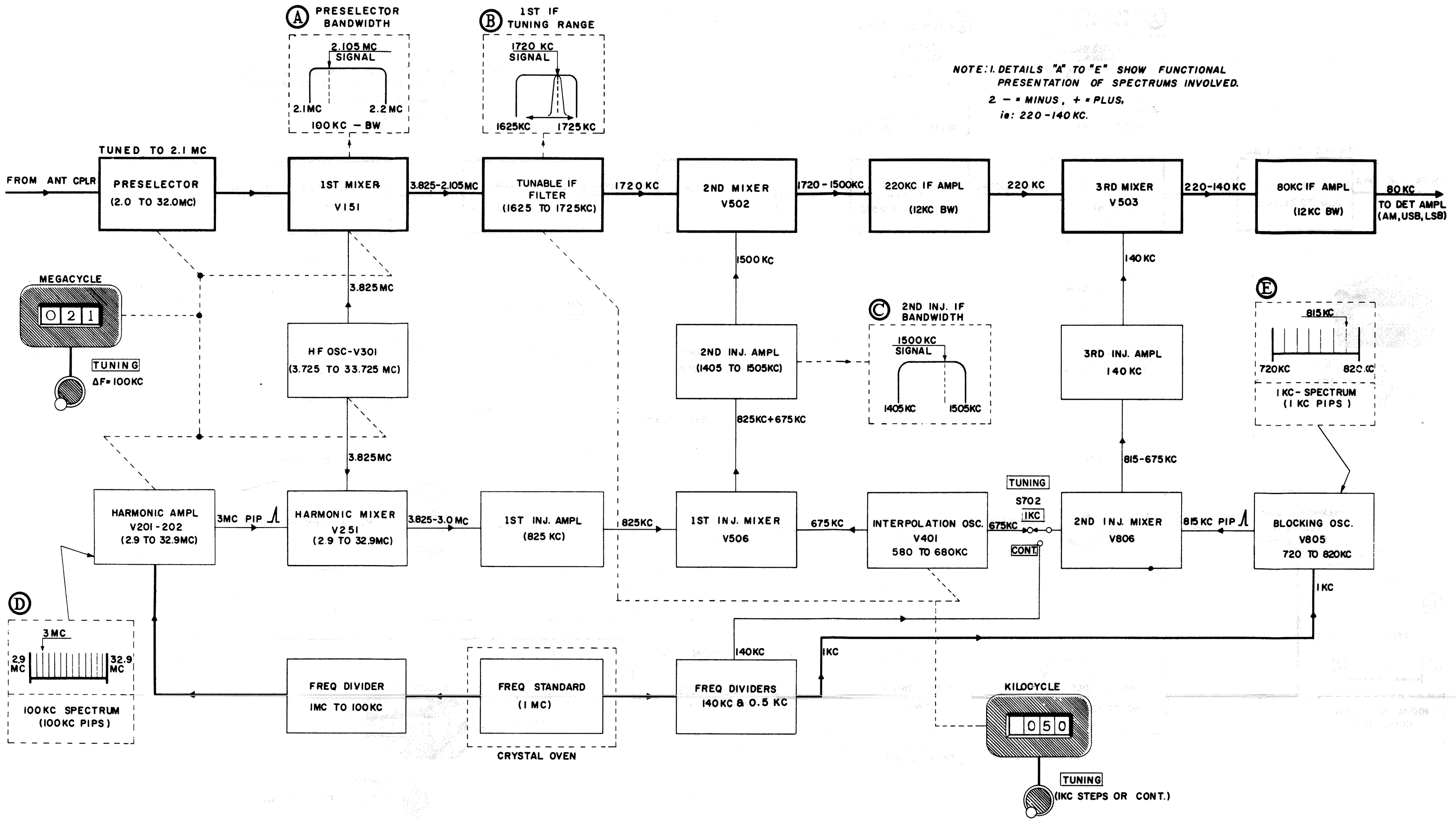

*NOTE: 1. DETAILS "A" TO "E" SHOW FUNCTIONAL PRESENTATION OF SPECTRUMS INVOLVED.*
*2. — = MINUS, + = PLUS,*
*ie: 220-140 KC.*

*Figure 4—5. Radio Receiving Sets AN/WRR-2A and AN/FRR-59A, Basic Tuning Diagram*

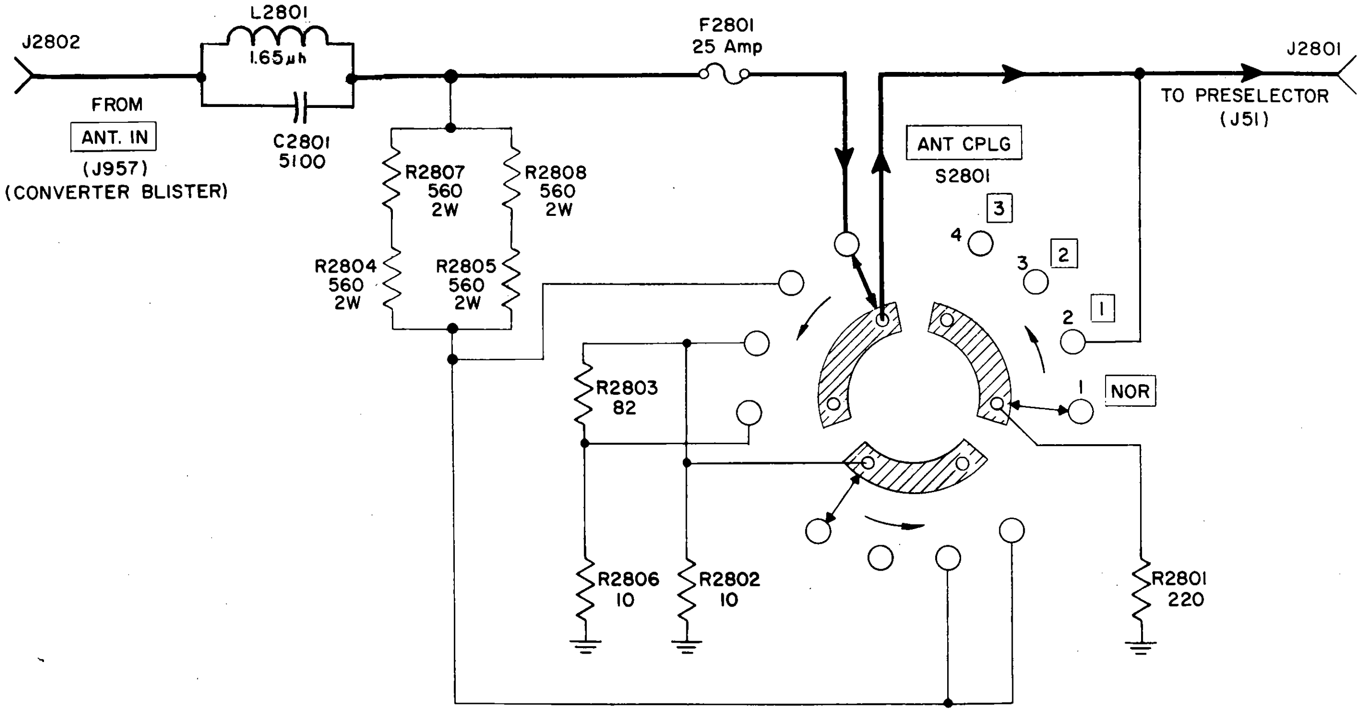

*Figure 4-6. Antenna Coupler, Simplified Schematic Diagram*

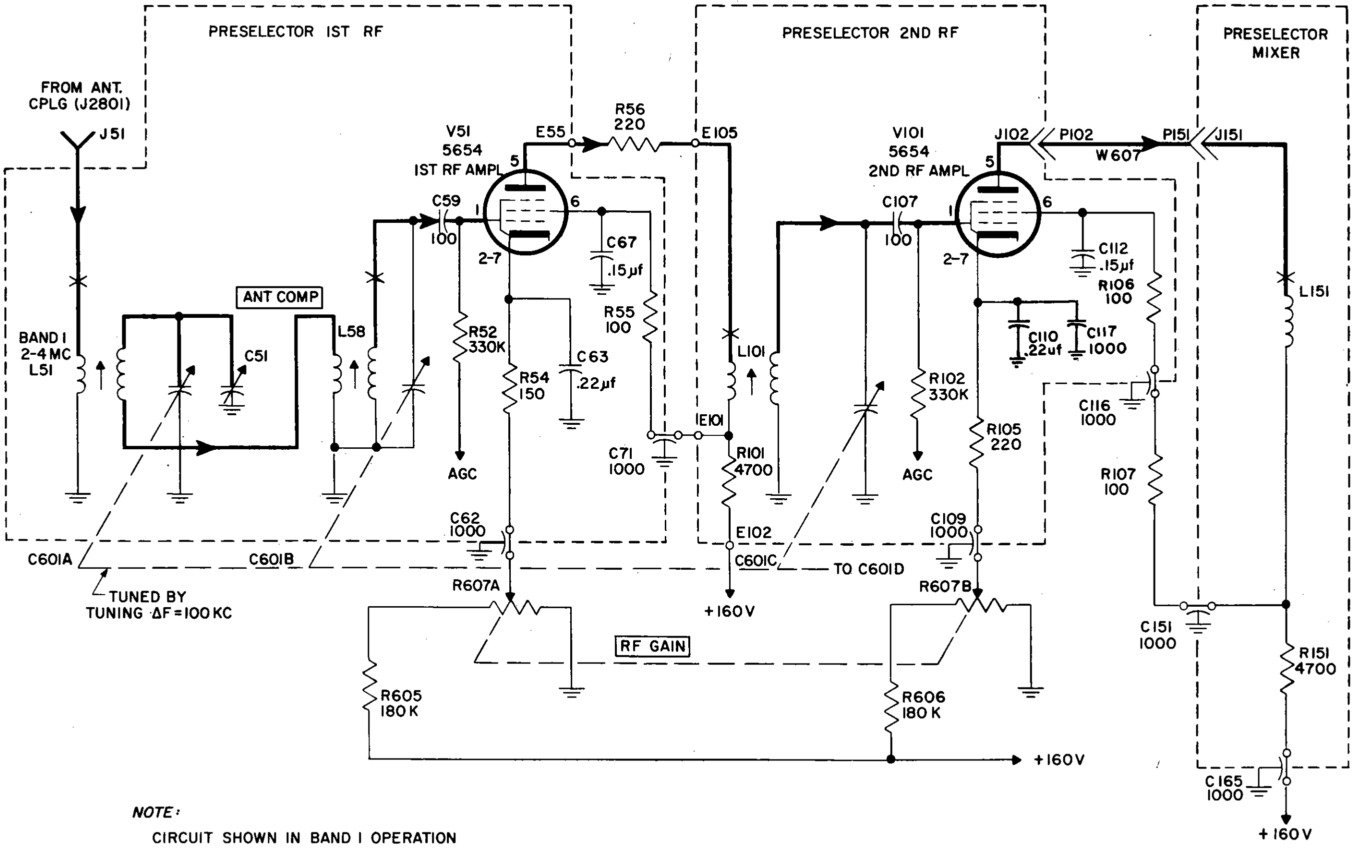

*NOTE:*

CIRCUIT SHOWN IN BAND I OPERATION

⁎ =BAND SWITCH CONTACTS ON S51, S52, S101, AND S151-1

*Figure 4-7. Preselector RF Amplifier, Simplified Schematic Diagram*

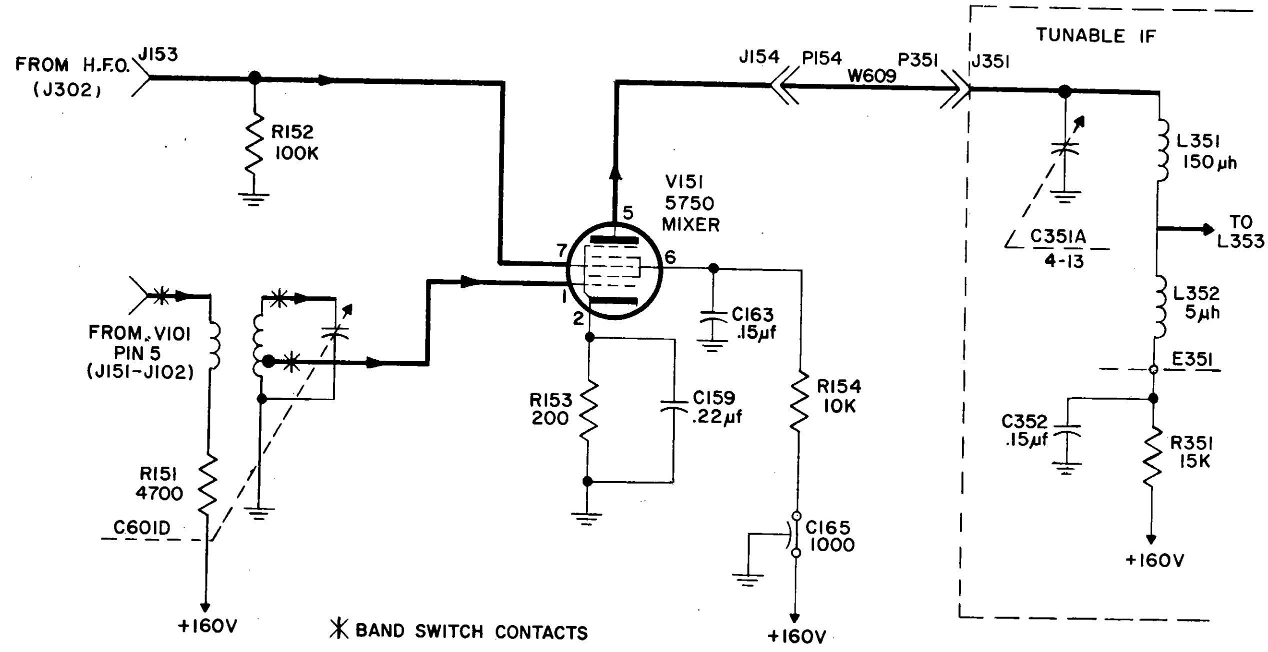

*Figure 4-8. Preselector Mixer, Simplified Schematic Diagram*

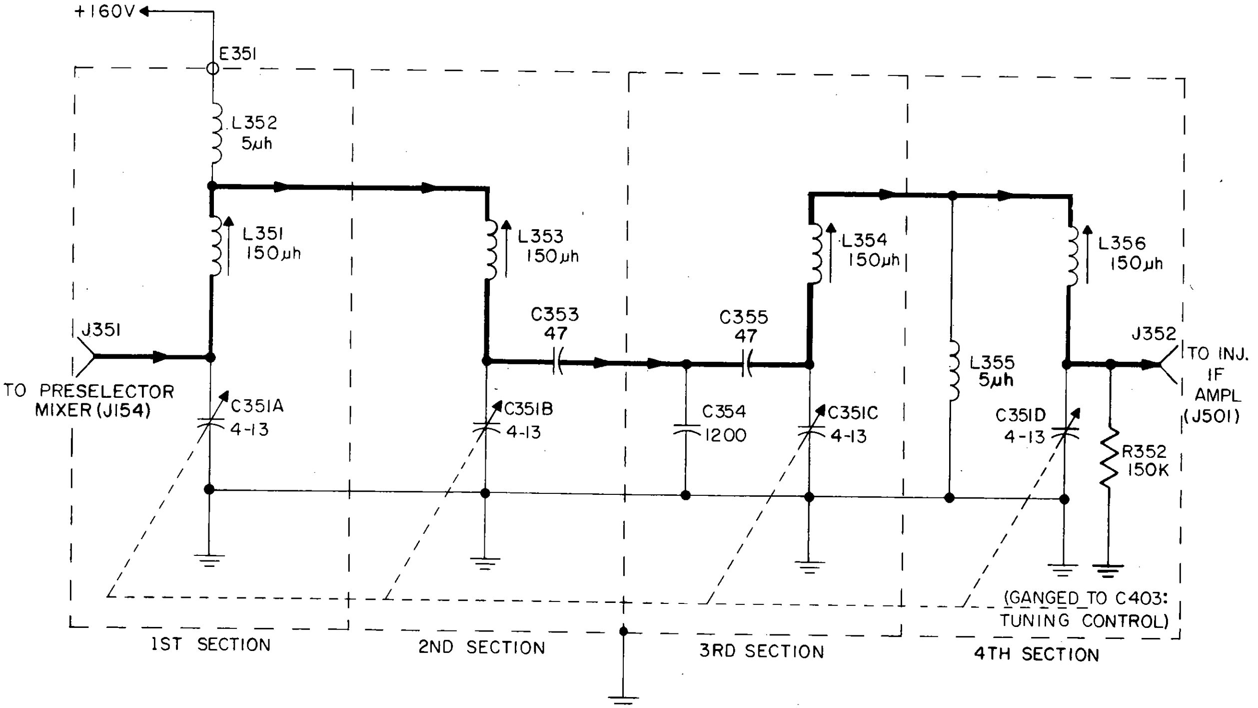

*Figure 4-9. Tunable IF Filter, Simplified Schematic Diagram*

Figure 4-9 shows the arrangement of the resonant circuits of the filter. Each filter section has a parallel-resonant circuit.

Inductance L351, L352, and capacitor C351A serve as the plate load for mixer V151. When capacitor C351A tunes L351 to signal resonance, the common signal current passes through RF coil L352. The second section is tuned to resonance by capacitor C351B. The signal voltage across C351B is maximum at resonance and is applied to the third filter section through the capacitive divider formed by capacitors C353, C354, and C355.

Capacitor C353 is the first series divider arm and C354 the shunt arm. C353 has about 25 times the capacitive reactance of C354 at the signal frequencies, and the signal divides proportionally. The remaining series arm, C355, provides a similar signal attenuation, thereby reducing the signal applied to capacitor C351C in the third filter section by a total factor of 30. Capacitor C351C tunes RF coil L354, and common coupling coil L355 to resonance, the signal current is coupled to resonant circuit C351D and L356 in the fourth filter section. The output signal at connector J352 is developed across C351D. Inductor L355 provides a termination impedance between the third and fourth filter sections.

## 4-6. INJECTION IF AMPLIFIER

*(See figure 4-10.)*

*a.* GENERAL.—The injection IF amplifier section develops the converter's final intermediate frequency (80 kc) from the outputs of the tunable IF filter (1,625 kc to 1,725 kc), the interpolation oscillator (580 kc to 680 kc), the harmonic mixer (825 kc), and the synthesizer (140 kc). As shown in figure 4-10, the output from the tunable IF filter is amplified by IF amplifier V501 and applied to mixer V502, which receives also a signal of 1,405 kc to 1,505 kc from IF amplifier V507. (This second signal is derived from the addition, in mixer V506, of a signal in the range of 580 kc to 680 kc from the interpolation oscillator and 825 kc from the synthesizer.) The 220 kc output of V502 is applied to mixer V503, where it is mixed with the 140 kc signal from the synthesizer and amplifier V508. Two AGC circuits in the injection IF amplifier regulate the signal voltages in their loops. One controls the output of V505, the other the output of V508.

*b.* FREQUENCY-DRIFT CANCELLATION.—The injection IF amplifier also includes circuits which contribute to the operation of frequency-drift-cancellation loops, as explained in paragraph 4-1*b*. If the output from a local oscillator is injected into each of two separate mixer stages, the difference frequencies in the respective mixer outputs (based on the difference between the local oscillator frequency and the frequency of the signal input to the mixer) will both be increased by an amount equal to the drift in the local oscillator frequency. If both mixer outputs are then injected into a third mixer stage, the combining action of the latter serves to eliminate the effect of the frequency drift. The difference in frequency between two signals remains the

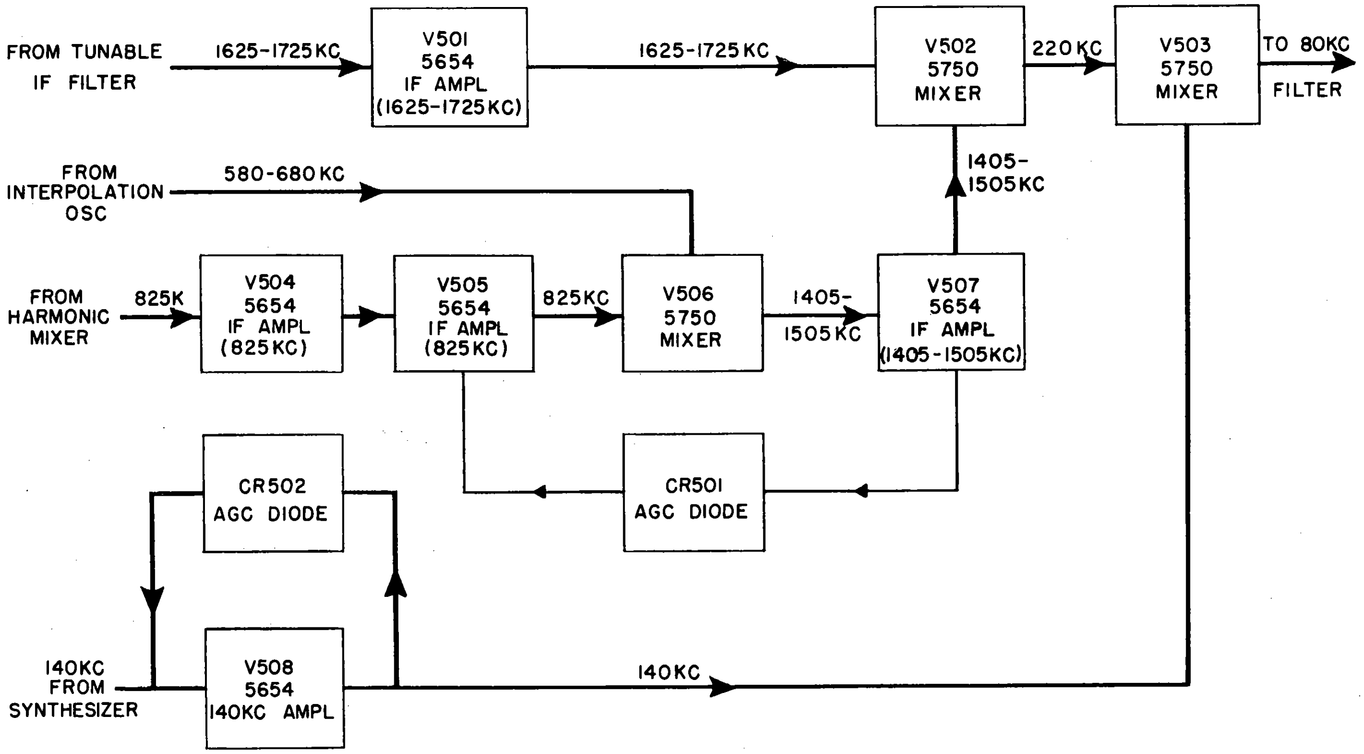

*Figure 4-10. Injection IF Amplifier, Block Diagram*

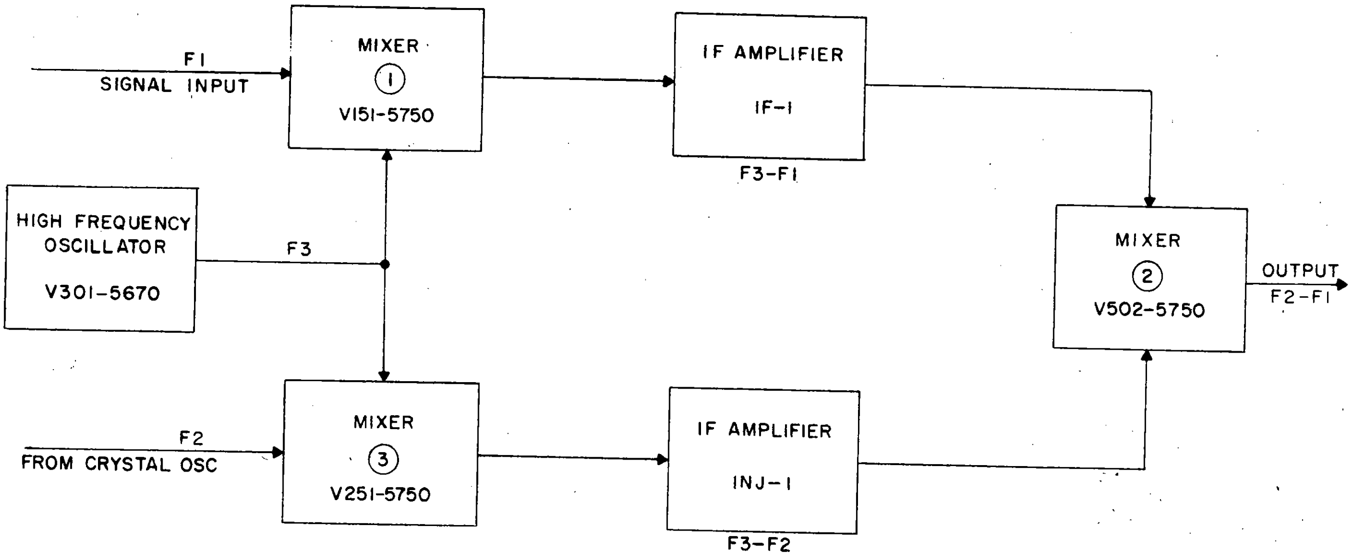

*Figure 4-11. Basic Frequency-Drift-Canceling Loop, Block Diagram*

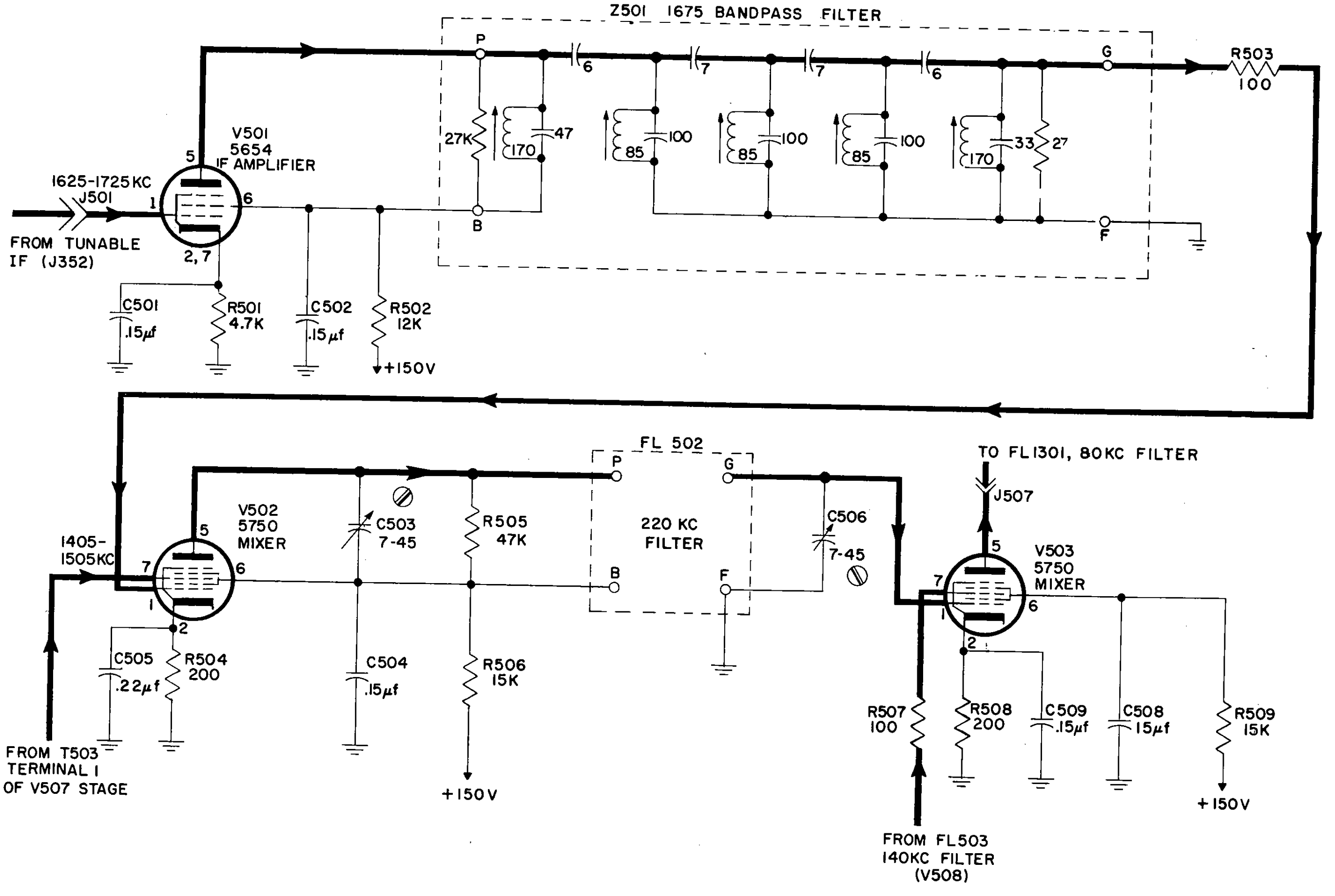

*Figure 4-12. IF Amplifier V501 and Mixers V502 and V503, Simplified Schematic Diagram*

same with increase in the frequency of each, provided that each signal increases by an identical amount prior to mixing.

In figure 4-11, an incoming signal of frequency F1 is injected into mixer 1. The high-frequency oscillator output (F3) is applied to the same mixer. The output from mixer 1 is the difference frequency of F3-F1 which, after being amplified in IF amplifier IF-1, is applied as one input of mixer 2. A similar process occurs in mixer 3, using as inputs the same high-frequency oscillator signal and an added locally generated signal (F2) from the receiver's crystal oscillator. The output from mixer 3 (F3-F2) is applied to mixer 2 through IF amplifier INJ-1. The difference frequency produced in mixer 2 is F2-F1, and the high-frequency oscillator signal (F3) is eliminated from the output.

*c.* IF AMPLIFIER V501, MIXERS V502 AND V503.—As shown in figure 4-12, the output of the tunable IF filter is supplied to IF amplifier V501 through J352 and J501. The plate load of V501 is bandpass filter Z501. Filter Z501 has a 100 kc bandpass with a center operating frequency of 1,675 kc. The output of the filter is applied to grid 1 (pin 1) of mixer tube V502. The second signal required for mixing action is applied to the other input, grid 3 (pin 7) of V502. This signal is obtained from T503 which is the output load of IF amplifier V507. The input signals to the mixer (V502) are so related that a difference-frequency signal of 220 kc will appear at the input of bandpass filter FL502. This filter is designed to operate at 220 kc but will pass signals in the range of 213.5 kc to 226.5 kc. The 220 kc signal is now passed on to the input grid (pin 1) of V503, which, after receiving another signal (140 kc) from 140 kc amplifier V508 at its other input grid (pin 7), mixes the two signals to produce the final intermediate frequency of 80 kc. The plate load for mixer V503 is the 80 kc filter assembly located in the demodulator.

*d.* IF AMPLIFIERS V504 AND V505.—As shown in figure 4-10, the development of the 1,405 to 1,505 kc signal used by mixer V502 is dependent on inputs from the interpolation oscillator (580 kc to 680 kc) and the harmonic mixer (825 kc). The 825 kc input from the harmonic mixer enters the injection IF amplifier at terminal 3 of T501 (figure 4-13). Intermediate frequency unit T501 is tuned to 825 kc and develops the input signal which is applied across R511 (grid resistor of V504). The output of IF amplifier V504 is impressed across bandpass filter FL504, the center operating frequency of which is 825 kc. This filter passes all signals in the range of 810 kc to 840 kc. The output of FL504 is applied to IF amplifier V505 through

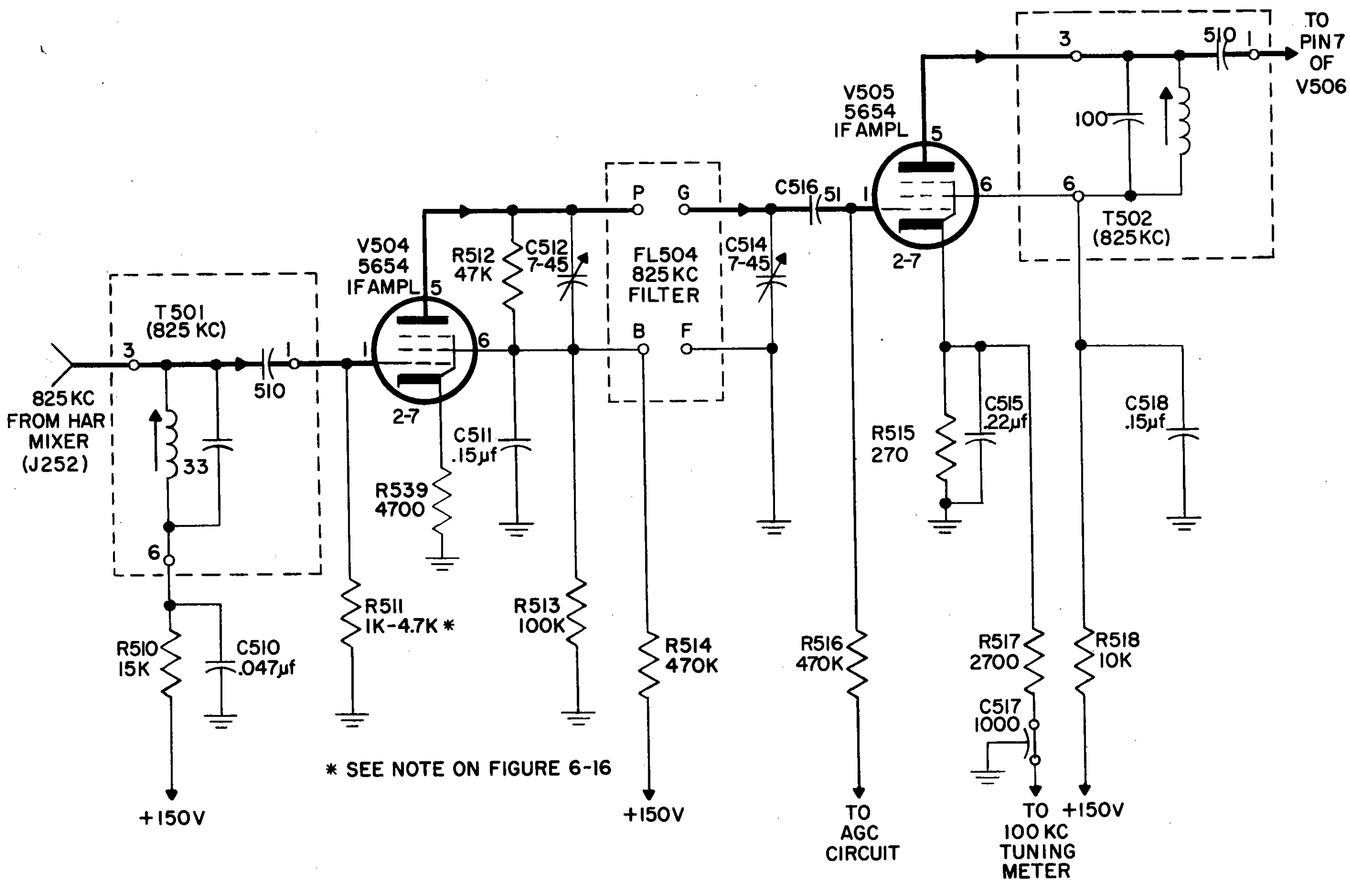

Figure 4-13. IF Amplifiers V504 and V505, Simplified Schematic Diagram

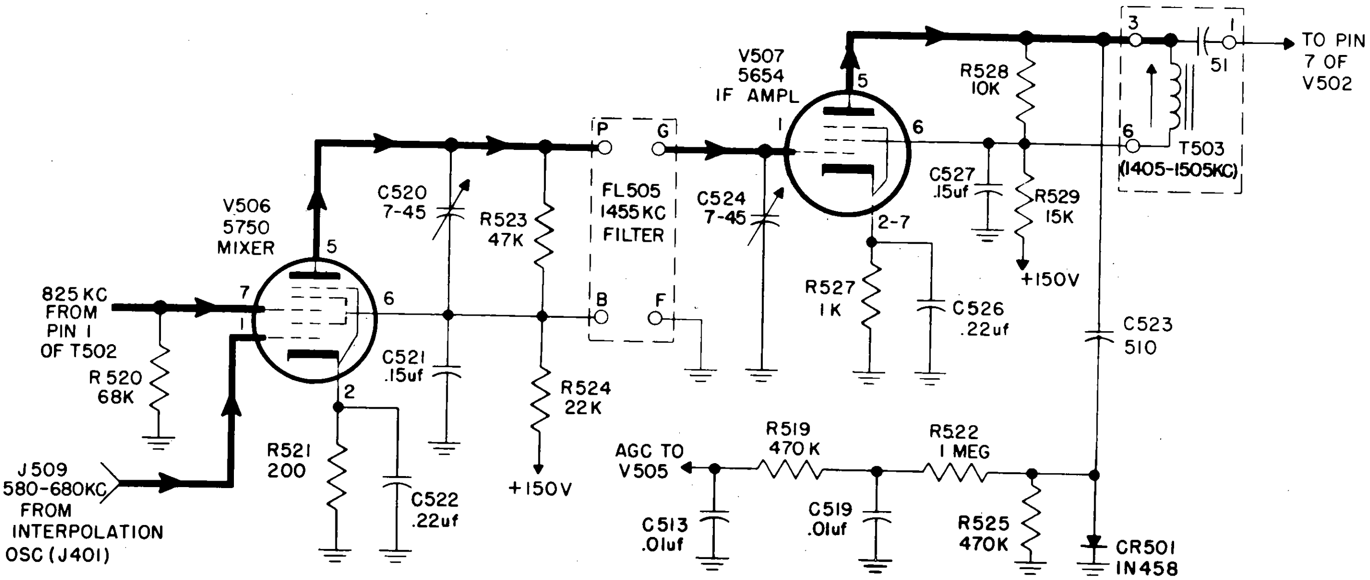

*Figure 4-14. Mixer V506 and IF Amplifier V507, Simplified Schematic Diagram*

coupling capacitor C516. The plate load of V505 is another intermediate frequency unit (T502, with characteristics similar to those of T501). The output from T502 is applied to pin 7 of V506 (figure 4-14). An AGC voltage, developed at the output circuit of V507, is applied to the control grid of V505 (figure 4-13). When the signal amplitude tends to increase, a greater negative AGC voltage is applied to V505. This reduces the gain of the amplifier, thus reducing the amplitude of its output. Conversely, a decrease in amplitude results in a less negative AGC voltage applied to V505 and a corresponding increase in signal amplitude at mixer V506 (figure 4-14). Provisions for monitoring the plate current are provided in the cathode circuit of V505 (figure 4-13). This feature is used when the receiver is tuned (TUNING △F = 100 KC control).

*e.* MIXER V506, IF AMPLIFIER V507.—As shown in figure 4-14, mixer V506 receives inputs from T502 (825 kc) and from the interpolation oscillator (580 kc to 680 kc) through J509. These inputs are mixed in V506 and supplied to bandpass filter FL505. The output of V506 contains signal components of the following frequencies: (1) 580 to 680 kc, (2) 825 kc, (3) the difference between 825 kc and the 580-to-680 kc range, and (4) the sum of the 825 kc and the 580-to-680 kc range. Since filter FL505 is tuned to the 1,405-to-1,505 kc range, only the sum frequency component of the V506 output will be passed to pin 1 of V507. The amplified output of V507 is developed at T503 and applied to mixer V502 (figure 4-12). A portion of the V507 output is coupled to AGC diode CR501 through capacitor C523. The shunt-connected diode clamps the positive half-cycle of the output signal to ground but allows the negative half-cycle to continue on through to an RC filter network comprised of R525, R522, C519, R519, and C513. The negative AGC voltage built up in the RC filter network is supplied to the control grid of V505 (figure 4-13). The extent of this negative voltage depends on the amplitude of the incoming signal to IM amplifier V507 (figure 4-14).

*f.* 140 KC AMPLIFIER.—The 140 kc signal from the synthesizer to the injection IF amplifier is supplied through connector J511 (figure 4-15). The 140 kc signal is amplified by V508 and applied to bandpass filter FL503 through capacitors C534, C535, and C536. The output signal from V508 is applied also to AGC diode CR502. Diode CR502 shunts the positive halfcycle of the V508 output signal to ground but permits the negative cycles to pass on to an RC filter network comprised of R536, C529, and R530. The negative voltage from the RC network is applied to the control grid of 140 kc amplifier V508. AGC action is thereby achieved in that a proportionate negative voltage corresponding to the output signal amplitude of V508 is developed and fed back to the control grid of V508. Provisions for monitoring the plate current are provided in the cathode circuit of V508. This feature is used when the receiver is tuned (TUNING control).

## 4-7. 80 KC FILTER

*(See figure 4-16).*

The 80 kc filter (FL1301) accepts the 80 kc intermediate frequency developed by mixer V503 (third conversion mixer figure 4-12) and passes it to two detector-amplifier sections of the demodulator. The filter has a center operating frequency of 80 kc with a 12 kc bandwidth. The 80 kc input is applied to the filter through connector J1301. The output of FL1301 is applied to the USB detector-amplifier through connectors J1302

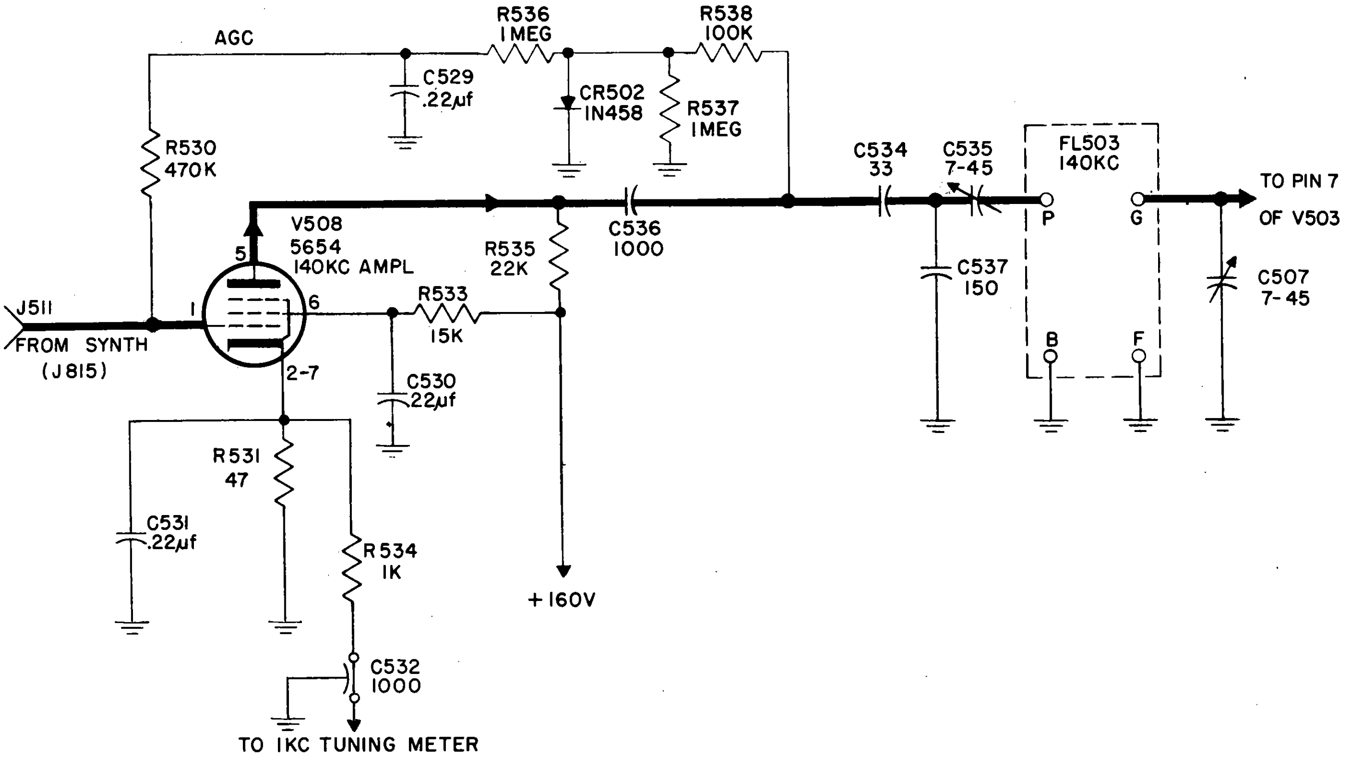

*Figure 4-15. 140 Kc Amplifier, Simplified Schematic Diagram*

and J1001 and to the AM detector-amplifier through connectors J1303 and J1601. The LSB detector-amplifier does not receive its 80 kc input signal directly from the 80 kc filter. The 80 kc signal supplied to the USB detector-amplifier is first amplified and then applied to the LSB section.

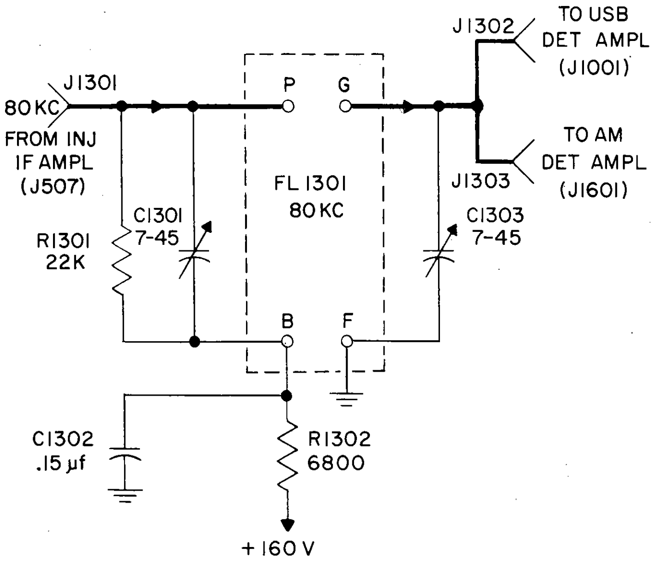

*Figure 4-16. 80 Kc Filter, Simplified Schematic Diagram*

## 4-8. AMPLITUDE MODULATION (AM) DETECTOR-AMPLIFIER.

*(See figure 4-17.)*

As shown in figure 4-17, the AM detector-amplifier consists of 80 kc IF amplifiers, an AGC circuit, a detector, a noise limiter, several audio amplifiers, and a beat-frequency oscillator. The AM detector-amplifier receives its 80 kc input from the 80 kc filter. The 80 kc signal is amplified by a four-stage IF amplifier (V1601 through V1604) and applied to detector CR1603. After detection, the audio signal is amplified in a four-stage AM amplifier. The output of the last stage is supplied as one of two possible outputs at the LINE A output connector. An AGC circuit provides gain control for the last three IF amplifier stages. This control is of the delayed type, allowing weak signals to be received more readily before AGC prevails, while also limiting strong signals to a level below the saturation point of the detector voltage/current characteristic. The AGC voltage is applied also to a tuning meter which indicates resonance in the front-end tuned circuits (preselector) and to silencer V1608B.

The silencer has in its plate circuit the coil of a single-pole, double-throw relay (subpar. *e*). In addition, two voltages are impressed on the grid input of the silencer, one positive, from a potentiometer, the other an AGC voltage. With no signal at the receiver input, the AGC circuit remains inoperative, so that only the positive voltage from the potentiometer divider

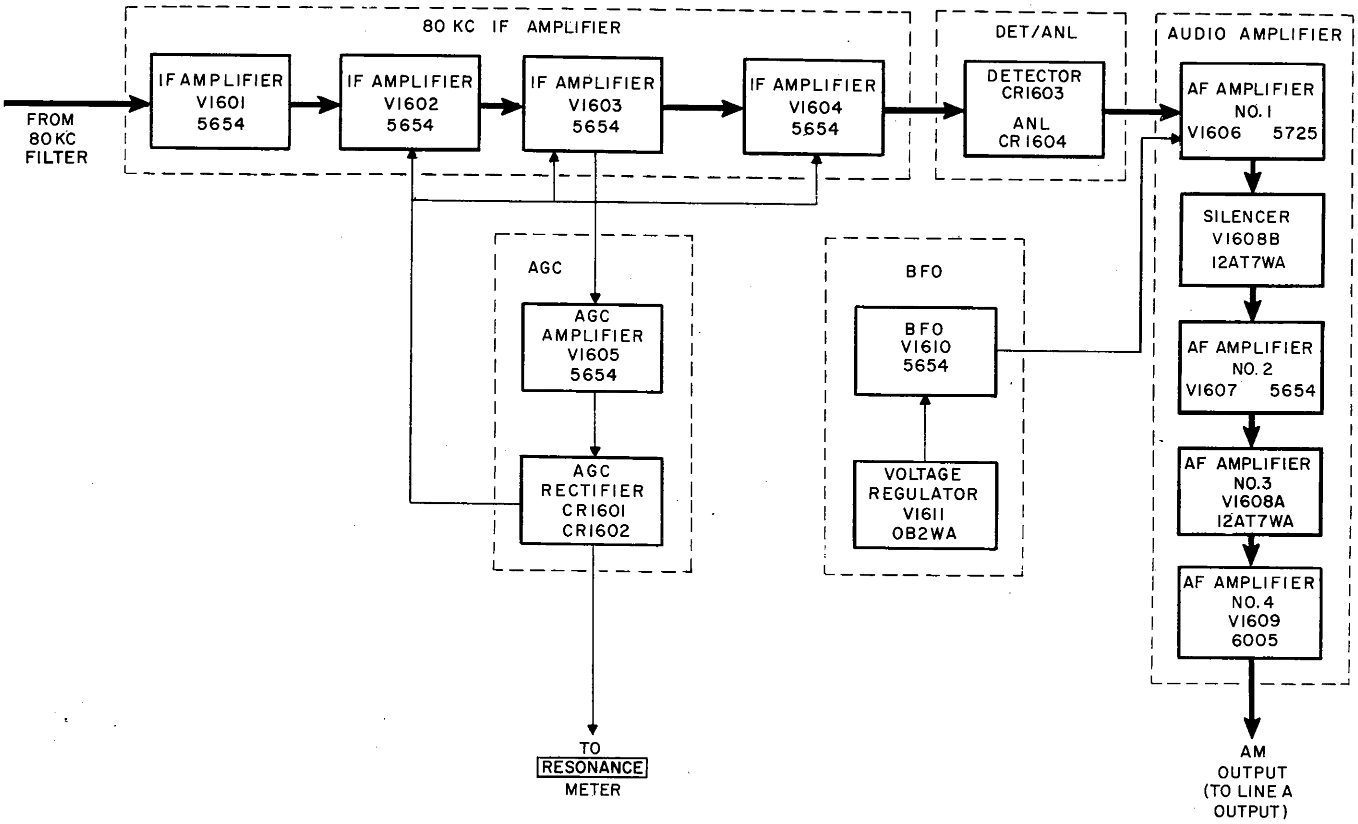

*Figure 4-17. AM Detector-Amplifier, Block Diagram*

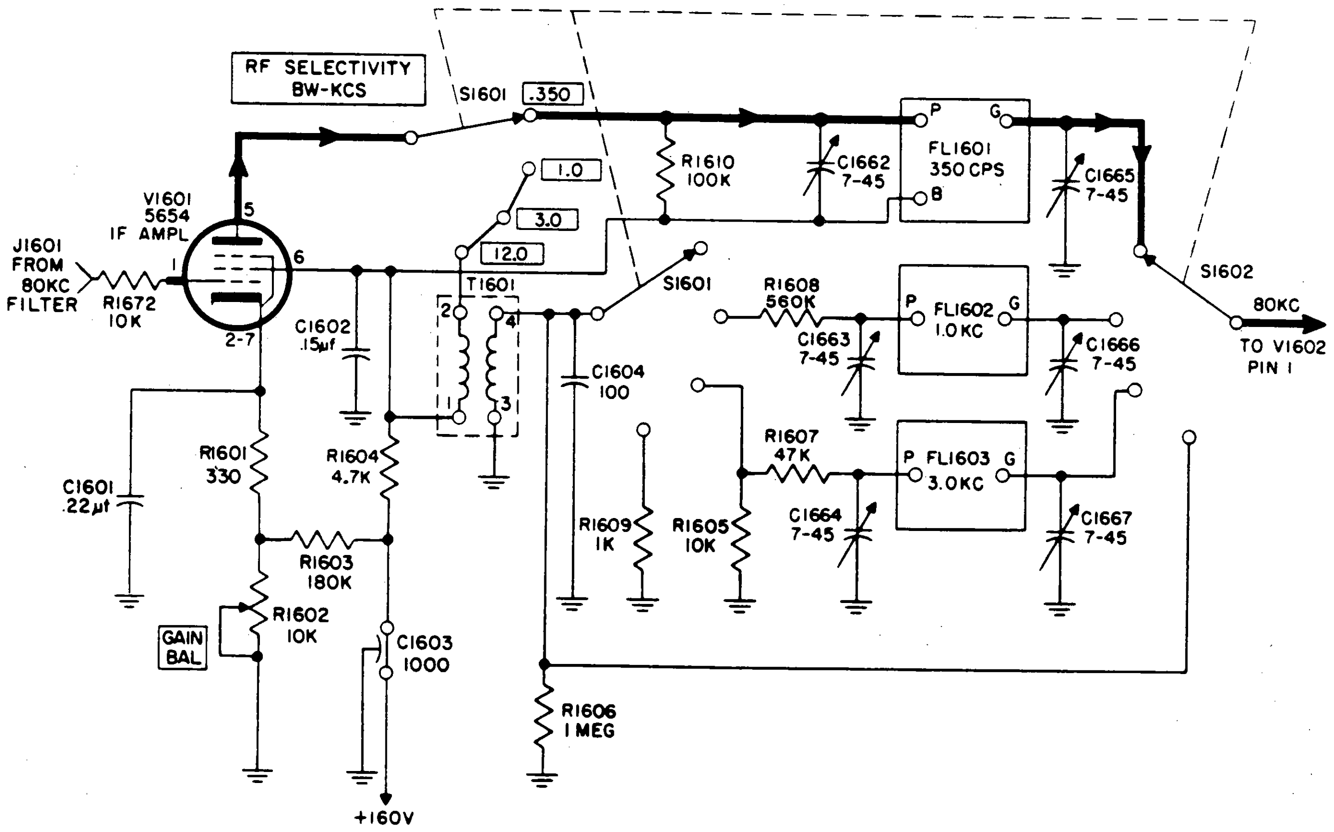

*Figure 4-18. IF Amplifier V1601, Simplified Schematic Diagram*

is applied to the silencer. This causes the silencer to conduct, energizing the relay coil and actuating the relay armature. The armature grounds the input of the second AF amplifier stage and so prevents the development of any output by later audio amplifier stages. When a signal does appear and when, as a result, the AGC circuit sets up a gain-control voltage at the silencer grid, there is an overriding effect. The negative AGC voltage combines with the positive bias at this grid. The net cancellation of voltage increases the grid bias and reduces the silencer plate current to such an extent that silencer relay coil becomes deenergized. The armature returns to its normally open position and removes the ground from the second AF amplifier stage. The incoming signal can now pass to the final audio amplifier.

When A1, F1, or F4 signals are received, a BFO signal is combined with them and both are applied to first audio amplifier V1606 (subpar. *d*). The BFO operates (for CW) at a frequency 1 kc higher than the IF signal it mixes with, producing a 1 kc output signal that is applied to V1607 (subpar. *e*.).

*a.* 80 KC IF AMPLIFIER. *(See figures 4-18 and 4-19.)* —The 80 kc IF amplifier has provisions for selection of four possible bandwidths—0.35 kc, 1 kc, 3 kc, and 12 kc, depending on the nature of received signals. These bandwidths are selected by the R.F. SELECTIVITY BW-KCS control. As shown in figure 4-18, the signal from the 80 kc IF filter is applied to IF amplifier V1601 through connector J1601. The gain of V1601 is controlled by GAIN BAL potentiometer R1602, which

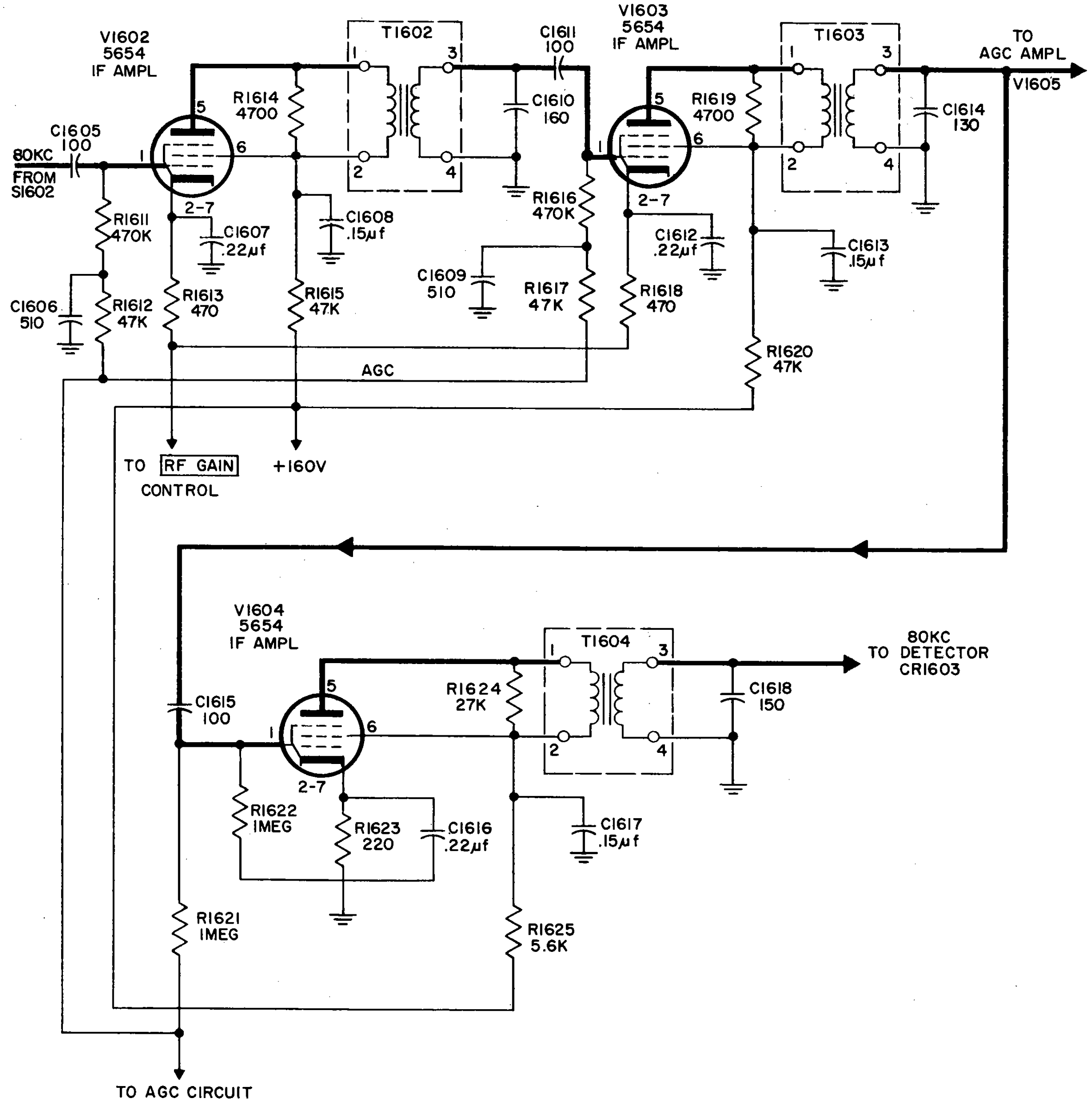

*Figure 4-19. IF Amplifiers V1602, V1603, and V1604, Simplified Schematic Diagram*

supplies a fixed bias voltage to the amplifier cathode. The RF SELECTIVITY BW-KCS control is shown in 0.35 position, in which filter FL 1601 becomes the plate load for V1601. In the other positions, the plate load is IF transformer T1601. In position 1.0, the output of T1601 is applied to filter FL1602, providing a 1.0 kc IF bandwidth. In position 3.0, the T1601 output goes to FL1603; at 12.0 it goes directly to IF amplifier V1602 for a full 12.0 kc bandwidth.

Figure 4-19 shows the signal from the selected band-pass filter applied to V1602 through C1605. The output of V1602 is developed across IF transformer T1602 and applied to IF amplifier V1603 via C1611. The gain of V1602 and V1603 is governed by the R.F. GAIN control. The output of V1603 is developed across T1603 and applied to IF amplifier V1604 through C1615. A portion of this signal at T1603 is applied also to the AGC circuit. V1604 develops its output across T1604 and applies it to the detector stage (subpar. *c*). An AGC voltage is applied to the control grids of amplifiers V1602, V1603, and V1604 to maintain control of the output signal amplitude. The development of this AGC voltage is described in subparagraph *b* below.

*b.* AUTOMATIC GAIN CONTROL CIRCUIT. *(See figure 4-20)*—An 80 kc IF signal taken from pin 3 of the secondary of interstage transformer T1603 (figure 4-19) is applied to the grid of AGC amplifier V1605. The amplified output of V1605 is developed at IF transformer T1605 and applied to the anode of AGC diode CR1601. The signal is rectified at this point and passed through R1629 and the RESONANCE meter. The AGC voltage developed across R1629 is filtered and divided by capacitors C1622, C1623, and C1624 and resistors R1630, R1631, R1633, R1634, and R1635. AGC voltage is made available at point A, from which it is applied to IF amplifiers V1602, V1603, and V1604, and at point B, from which it is applied to the grid of silencer tube V1608B and to RESONANCE meter M601.

The basic AGC circuit described above is supplemented by three added features. One is the delay in AGC action introduced into the load to permit weak signals to be received more readily before AGC action takes over and reduces the gain of the IF amplifiers. The delay is produced by the biasing of CR1601 with a voltage produced by voltage divider R1632-R1635. Therefore, A is positive with respect to ground, and any negative (rectified dc) voltage at points A and B (with diode CR1602 nonconducting) must exceed the positive voltage at A to produce AGC at point B.

Another feature of the AGC circuit is that points A and B cannot go excessively positive; this protects the tubes to which A and B are connected. Also, in case AGC action is missing, point A becomes clamped to ground, protecting the IF amplifiers to which it is connected. This protection is afforded by the insertion into the AGC circuit of diode CR1602, shunted by capacitor C1624. When there is no signal voltage at

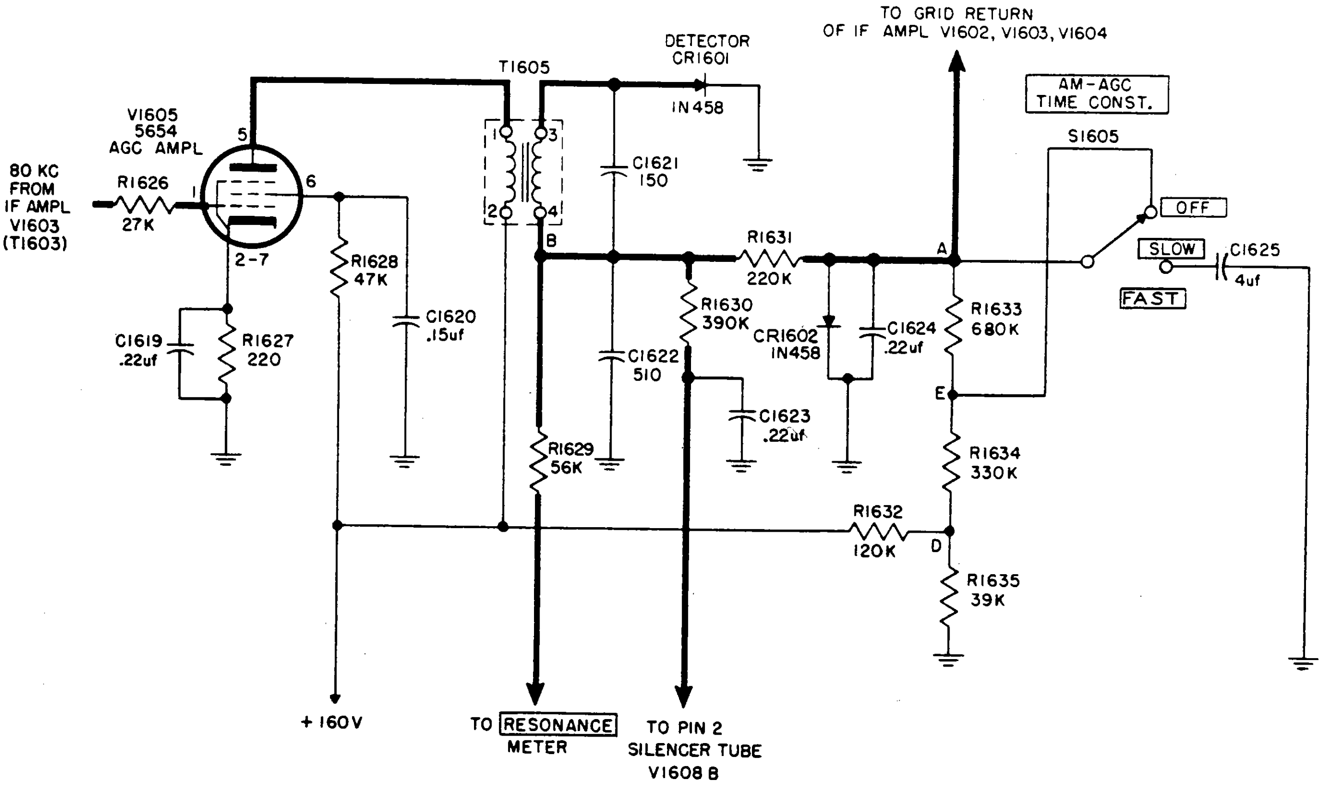

*Figure 4-20. Automatic Gain Control Circuit of AM Detector-Amplifier, Simplified Schematic Diagram*

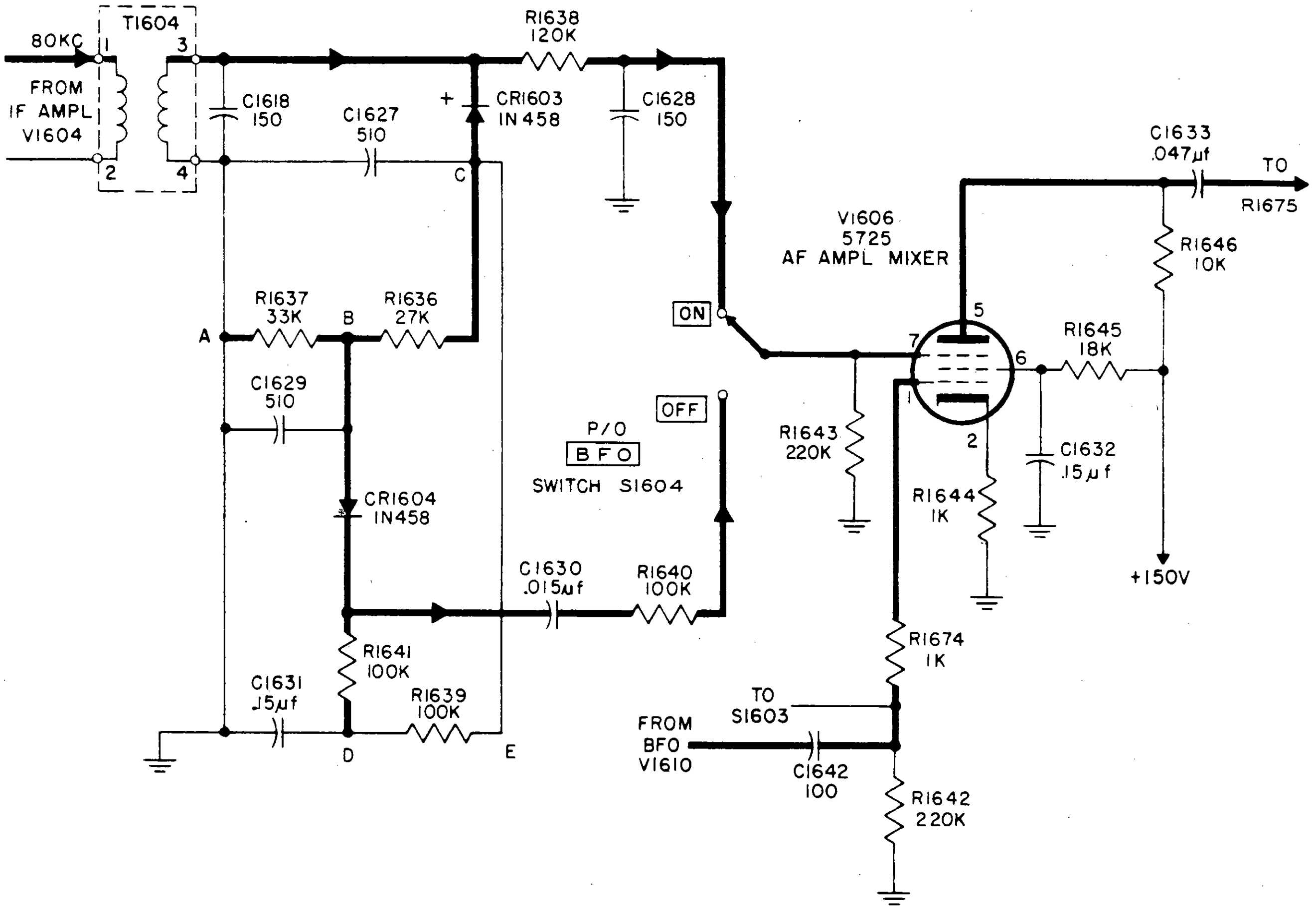

*Figure 4-21. Detector CR1603 and Automatic Noise Limiter CR1604, Simplified Schematic Diagram*

the secondary of transformer T1605, diode CR1602 conducts as a result of the positive voltage at A. This clamps point A to ground (ignoring the small voltage across the anode-cathode resistance of the diode). If a sufficiently large negative voltage now appears at point B, it overrides the positive voltage originally at A and causes diode CR1602 to become nonconducting. This makes available an AGC negative voltage at points A and B.

A third feature of the AGC circuit is its provision for varying time constants by means of the A.M.-A.G.C. TIME CONST. control (S1605) on the upper demodulator panel. This switch connects capacitors of different capacitances across diode CR1602. In the FAST position, capacitor C1624 is connected across CR1602, and at SLOW C1625 is switched in parallel with C1624. At OFF, resistor R1633 is shorted out, increasing the delay effect of the AGC circuit, there being a larger positive voltage at point A, with a correspondingly larger negative voltage required at B before AGC action can take over again. In effect, AGC is reduced to a small residual value for low signal levels.

*c.* DETECTOR CR1603, AUTOMATIC NOISE LIMITER CR1604. *(See figure 4-21.)*—The 80 kc output developed at T1604 (plate load of IF amplifier V1604) is applied to CR1603, which is used in a conventional diode detector circuit. The output of the detector is developed across load resistors R1636 and R1637 and applied to the B.F.O. switch (S1604), on the upper demodulator panel, through a filter network consisting of R1638 and C1628. Also associated with the detector is a series-connected automatic noise limiter, CR1604, which limits voltage surges. The noise limiter becomes a functional part of the receiver only when the B.F.O. switch is in the OFF position.

The negative half of the modulated IF signal at the secondary of transformer T1604 causes conduction in diode CR1603 of the detector circuit, making point B negative with respect to A (ground). When normal signals are received, detector action causes B to be more negative than A; therefore, the anode of CR1604 is negative to ground. Point D, however, is normally more negative than B, so that CR1604 conducts, and AF signals are available at the cathode side of load resistor R1641. Capacitor C1631 also charges during conduction and at a rate determined by the time constant (R1639 and C1631).

When there is a noise peak appreciably higher than the signal level, a large negative voltage is impressed suddenly on detector load resistors R1636 and R1637, making point B, and hence the anode of CR1604, highly negative with respect to ground. Because of the relatively long time constant of R1639 and C1631, however, the cathode of diode CR1604 cannot follow the sudden change. The anode of CR1604 now becomes negative with respect to its cathode, and the diode no longer conducts. This prevents the signal from reaching AF amplifier V1606 and keeps the receiver quiet during the surge of noise voltage.

*d.* AF AMPLIFIER V1606 *(See figure 4-21.)*—The input at pin 7 of AF amplifier V1606 is connected to either of two detector outputs, depending on whether the detector is used alone or in conjunction with the automatic noise limiter, as selected by the B.F.O. switch. A second input, applied at pin 1, is developed by BFO V1610 for all modes of receiver operation except modulated continuous wave (MCW) and amplitude modulation (AM), when V1606 operates as a conventional AF amplifier. The output of V1606 is developed across R1646 and is coupled through coupling capacitor C1633, to the audio filter circuit, which is composed of R1675, R1676, C1668, C1669, and C1670.

*e.* SILENCER CIRCUIT. *(See figure 4-22.)*—The silencer, or squelch, circuit, used principally for voice (A3) reception, cuts off receiver output when no signal is being received. The grid of silencer tube V1608B has two voltage sources—one, negative, from point B of the AGC circuit (figure 4-20) the other, positive, from potentiometer R1664, which is part of a voltage divider between regulated +105v and ground. Rotating the SILENCER control (upper demodulator panel) clockwise from its OFF position connects the cathode of V1608B to ground and simultaneously taps the voltage-divider network for a positive voltage to the grid of V1608B. If there is no signal at the receiver, the AGC circuit, being dependent for operation on an incoming signal, remains inactive. This makes the receiver extremely sensitive, permitting locally generated random noise and external interference to appear at the receiver output. With AGC inactive, the only voltage impressed on the grid of V1608B is that from voltage divider R1664. This makes the grid positive with respect to its cathode, resulting in a plate current sufficient to energize the coil of relay K1601, which is located in the plate circuit of V1608B. The plate current closes the normally open armature of K1601, grounding the input of the second AF amplifier (V1607) and preventing any signal from reaching the receiver output.

When there is a signal at the receiver input, a negative AGC voltage appears at the grid of V1608B, overriding its positive bias, reducing the tube's plate current, and de-energizing the coil of relay K1601. The relay armature reopens, removing the ground from the input of AF amplifier V1607 and permitting transfer of the AF signal through the output-limiter circuit

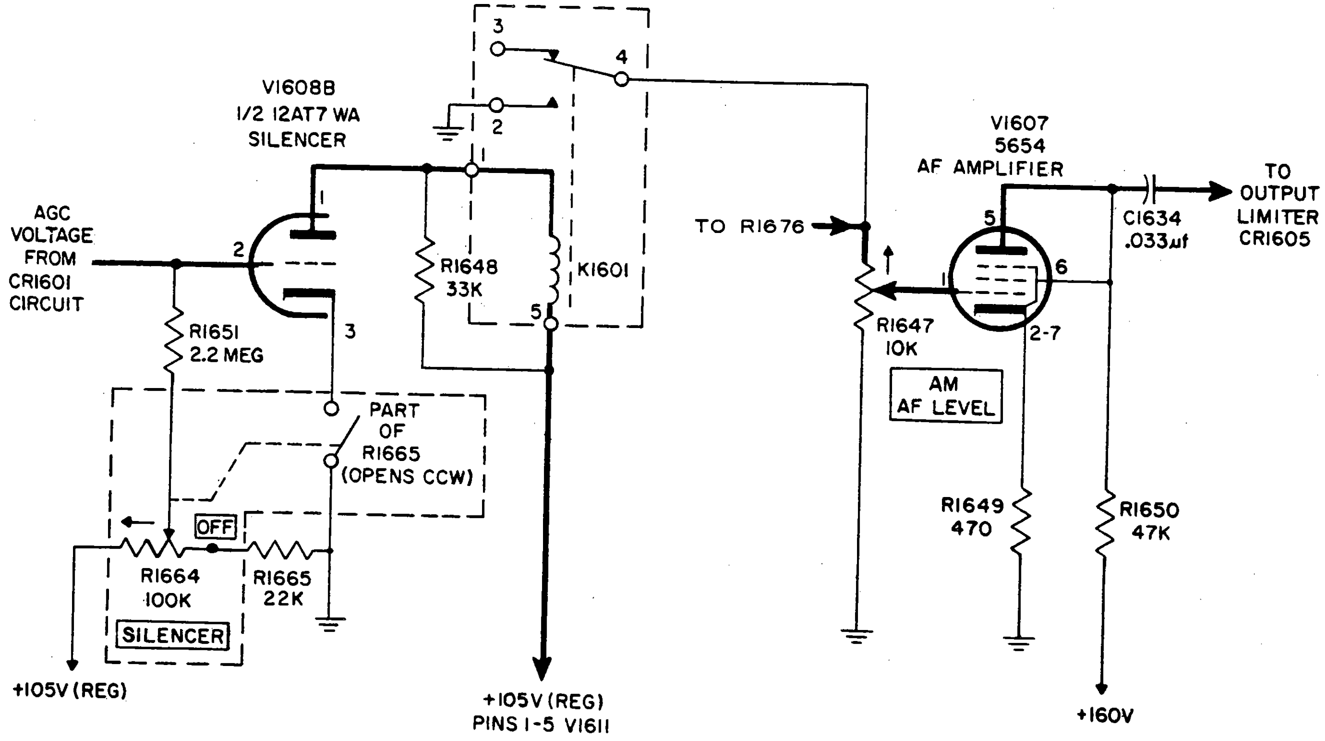

*Figure 4-22. Silencer V1608B and AF Amplifier V1607, Simplified Schematic Diagram*

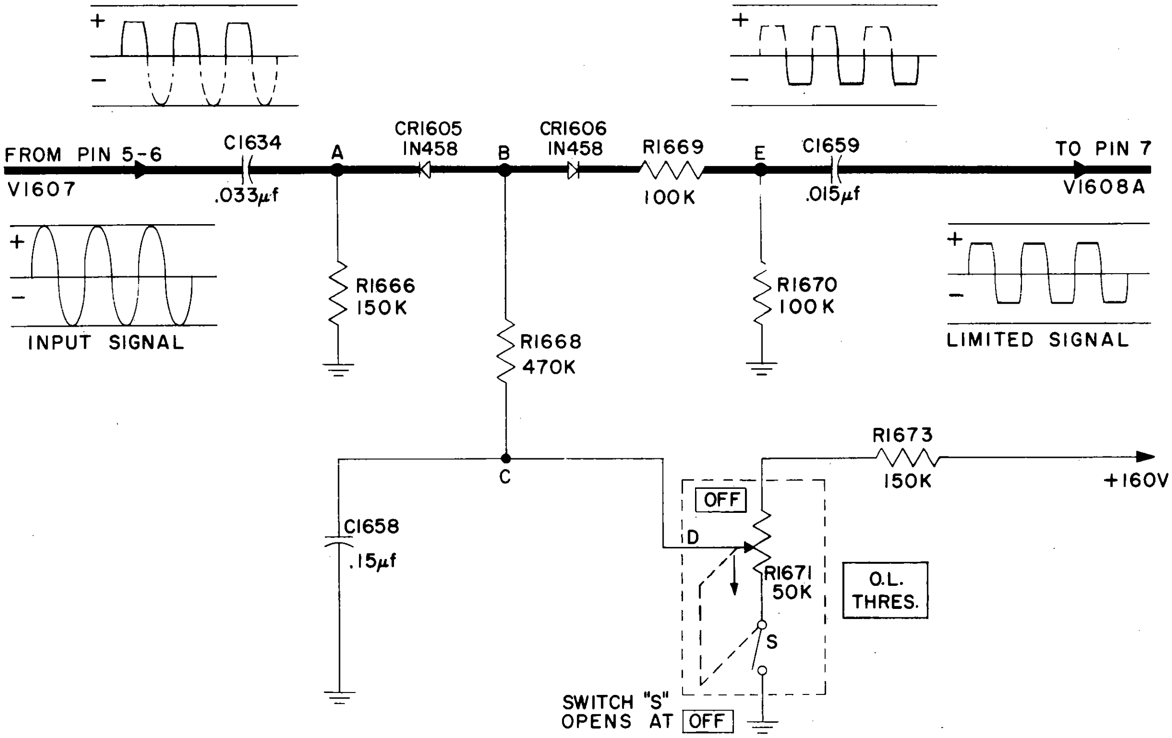

*Figure 4-23. Output-Limiter Circuit CR1605 and CR1606, Simplified Schematic Diagram*

(paragraph 4-8*f*) and the remaining AF amplifier stages (V1608A and V1609) to the receiver output.

The grid of V1608B is protected against excessive positive bias by a negative voltage drop across grid resistor R1651. In the absence of an AGC signal, the grid of V1608B is biased positively with respect to the cathode, and grid current flows, producing in resistor R1651 a voltage drop of polarity opposite that of the source of voltage divider R1664. Therefore, the voltage at the grid of V1608B with no AGC present equals the difference between source voltage and the voltage drop across grid load resistor R1651.

AF amplifier V1607 (figure 4-22) receives from R1676 (figure 6-18) an input developed across AM AF LEVEL control R1647, with the amplitude controlled by potentiometer R1647. The amplifier uses a pentode tube connected for triode operation. Its output is developed across plate load resistor R1650 and is coupled to the output-limiter circuit through capacitor C1634.

*f.* OUTPUT-LIMITER CIRCUIT. *(See figure 4-23.)* —The output-limiter circuit associated with the AM detector-amplifier is designed to limit the amplitude of the voltages to predetermined levels by clipping symmetrically both halves of the AF signal. The dc voltage level at which clipping occurs is governed by potentiometer R1671, a variable control to which is attached an on/off switch (S in figure 4-23). Both potentiometer and switch are operated by the O.L. THRES. control on the upper demodulator panel.

When switch S is closed (O.L. THRES. at any point but OFF) and there is no audio input at A, dc voltages are present at points A, B, and E, depending for their magnitude on the setting of D at R1671. AF signals applied at A are superimposed on the existing dc voltage, resulting in a varying AF voltage about the dc viltage. Both halves of the input AF cycle are limited at a level determined by the reference voltage on capacitor C1658 at C.

In the positive portion of the input signal cycle at A, as the varying AF signal increases in amplitude, the potential difference between points C and A becomes smaller. Since the voltage at C is still greater than that at A, there is still conduction through diode CR1605 and a consequent voltage drop across resistor R1668. This drop, however, is less than it was before application of AF voltage at A, because of the smaller difference in potential between points C and A. Therefore, the voltage at B is greater by the amount of decrease in voltage drop in R1668, and the voltage at E is correspondingly increased. This variation in AF voltage is impressed on the grid of V1608A (figure 4-24). Thus, all voltages on the positive half of the AF input signal are passed on to the V1608A grid so long as the voltage at which clipping occurs has not been reached.

When the positive voltage at A reaches (or exceeds) the reference position voltage at C, the diode (CR1605) anode potential at B becomes either equal to A or negative with respect to A. In either case, conduction through diode CR1605 ceases, and the AF signal is prevented from reaching the grid of V1608A. The signal is therefore clipped at this audio input level.

During the negative half of the input AF signal the potential between C and A increases, and with CR1605 conducting there is a greater voltage drop across R1668.

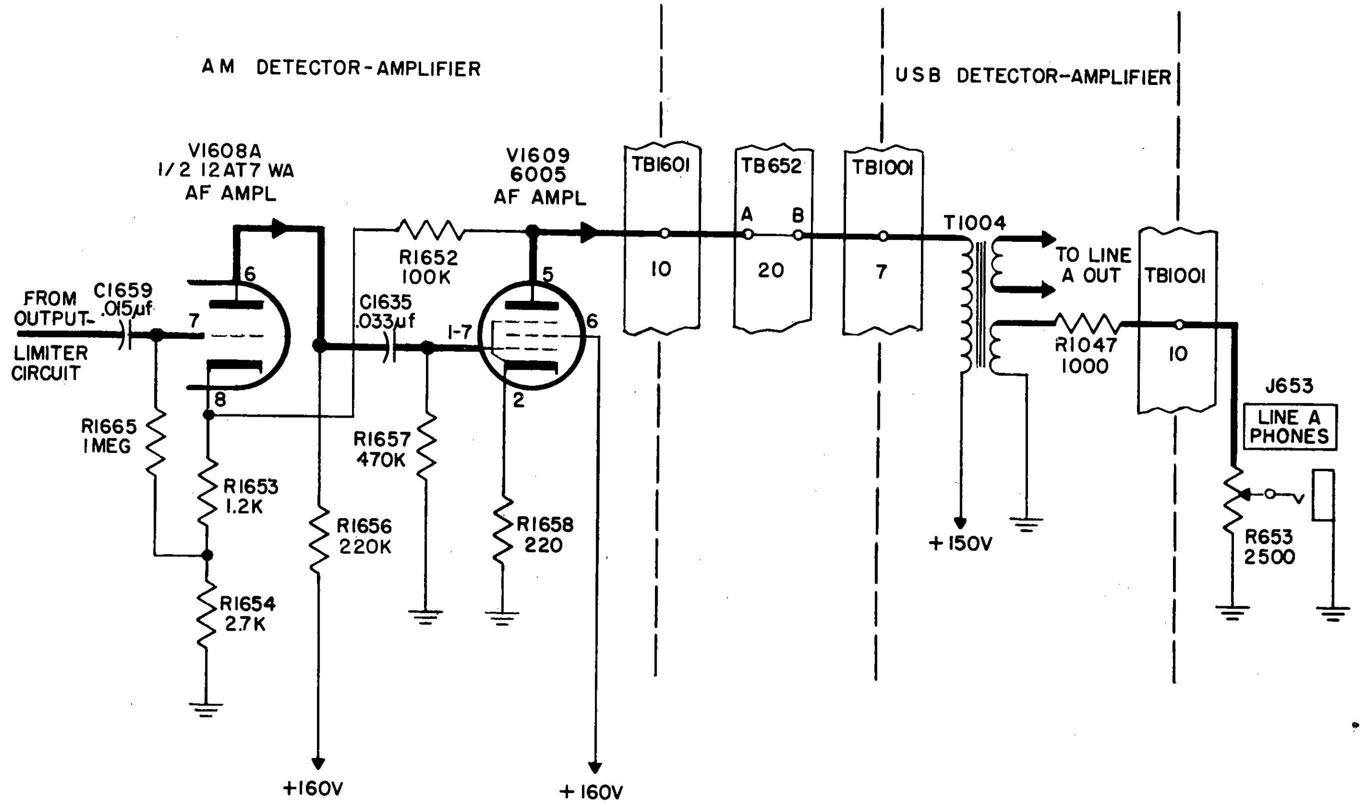

Figure 4-24. AF Amplifiers V1608A and V1609, Simplified Schematic Diagram

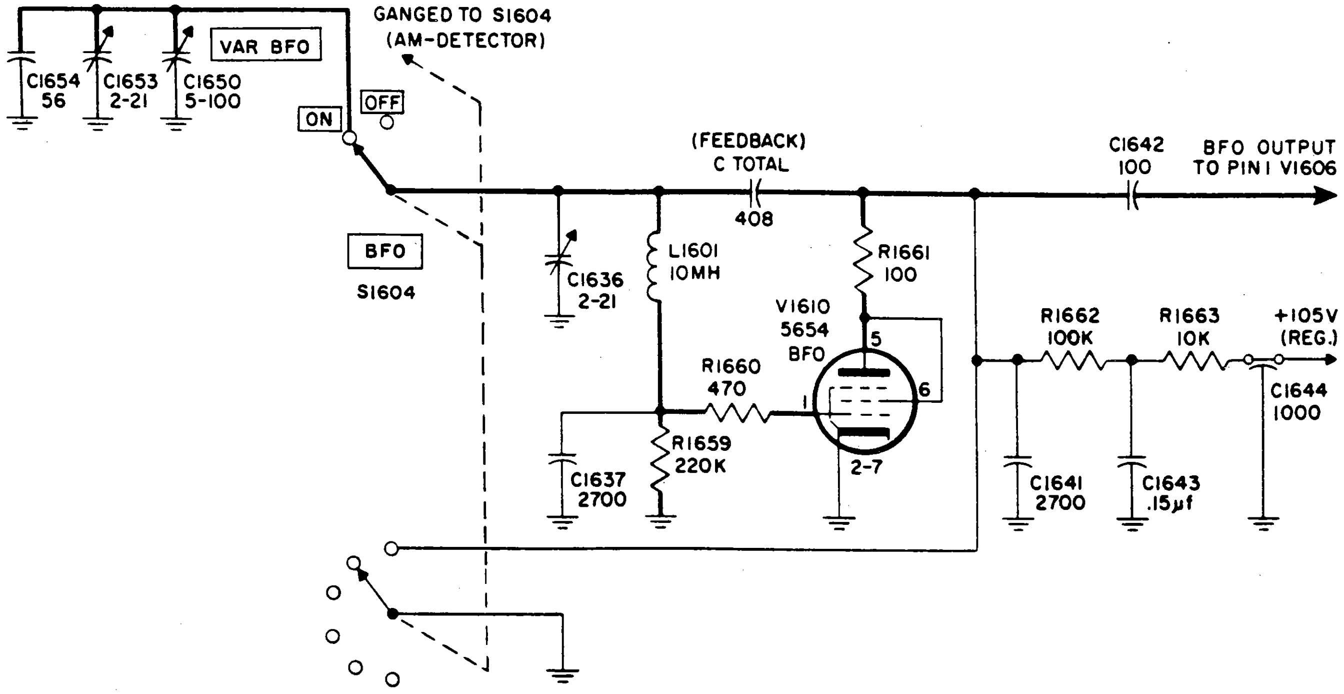

Figure 4-25. Beat-Frequency Oscillator V1610, Simplified Schematic Diagram

This is reflected as a negative going voltage at the grid of V1608A. A negative variation in input voltage at the grid of V1608A occurs for all corresponding negative inputs at A until clipping occurs for the negative half-cycle of the audio waveform.

Clipping occurs when the negative input at A is large enough to cause the voltage drop across R1668 to exceed the positive reference voltage at C. The voltage drop in R1668 is negative going from C to B. Therefore, the net voltage between point B and ground is the difference between the voltage at C and the voltage drop across R1668. Since the voltage drop across R1668 exceeds the reference voltage at C, point B is now negative with respect to ground. This condition likewise causes the anode of diode CR1606 to be negative with respect to its cathode and the diode to become nonconducting. With CR1606 nonconducting, no AF signal reaches the grid of V1608A. Again clipping has been brought about, this time in the negative half of the audio signal.

When switch S is opened (O.L. THRES. at OFF), the voltage at C becomes so high relative to the audio input at A that the varying voltage is not subjected to clipping, and the signals are passed through from AF amplifier V1607 to AF amplifier V1608A without any effect on the audio waveform.

*g.* AF AMPLIFIERS V1608A and V1609. *(See figure 4-24.)*—Amplifiers V1608A and V1609 are conventional AF amplifiers except for the application, from the plate of V1609 to the cathode of V1608A, of a negative feedback applied through a voltage-divider network consisting of resistors R1652, R1653, and R1654. Feedback is derived also from unbypassed cathode resister R1658 of V1609. The input to the grid of V1608A is derived from the output-limiter circuit by way of capacitor C1659. The output of V1608A is developed across plate load resistor R1656 and coupled to the grid of V1609 through capacitor C1635. The output of V1609 is developed across output transformer T1004, which, though located in the USB detector-amplifier, is common to both USB and AM detector-amplifiers. T1004 has two outputs, one to LINE A OUT (located on demodulator blister) and one to LINE A PHONES (located at center of demodulator lower deck front panel).

*h.* BEAT-FREQUENCY OSCILLATOR. *(See figure 4-25.)*—The beat-frequency oscillator (BFO) operates in conjunction with the first AF amplifier (V1606) to provide reception of keyed CW and frequency-shift signals. BFO and 80 kc IF signals are heterodyned in V1606 to produce the desired beat note. The output frequency signal of the BFO is determined by the position of the B.F.O. switch on the upper demodulator panel. There are two positions. OFF position, with the BFO inoperative, is used for reception modes other than keyed CW and frequency-shift, ON position provides a frequency vernier control of approximately 3 kc either side of "zero beat."

### 4-9. UPPER-SIDEBAND DETECTOR-AMPLIFIER.
*(See figure 4-26.)*

*a.* GENERAL.—Two detector-amplifiers comprise the single-sideband portion of the receiver, making possible either upper- or lower-sideband reception, or both simultaneously. This paragraph discusses operational theory of the upper sideband. Figure 4-26 is a related

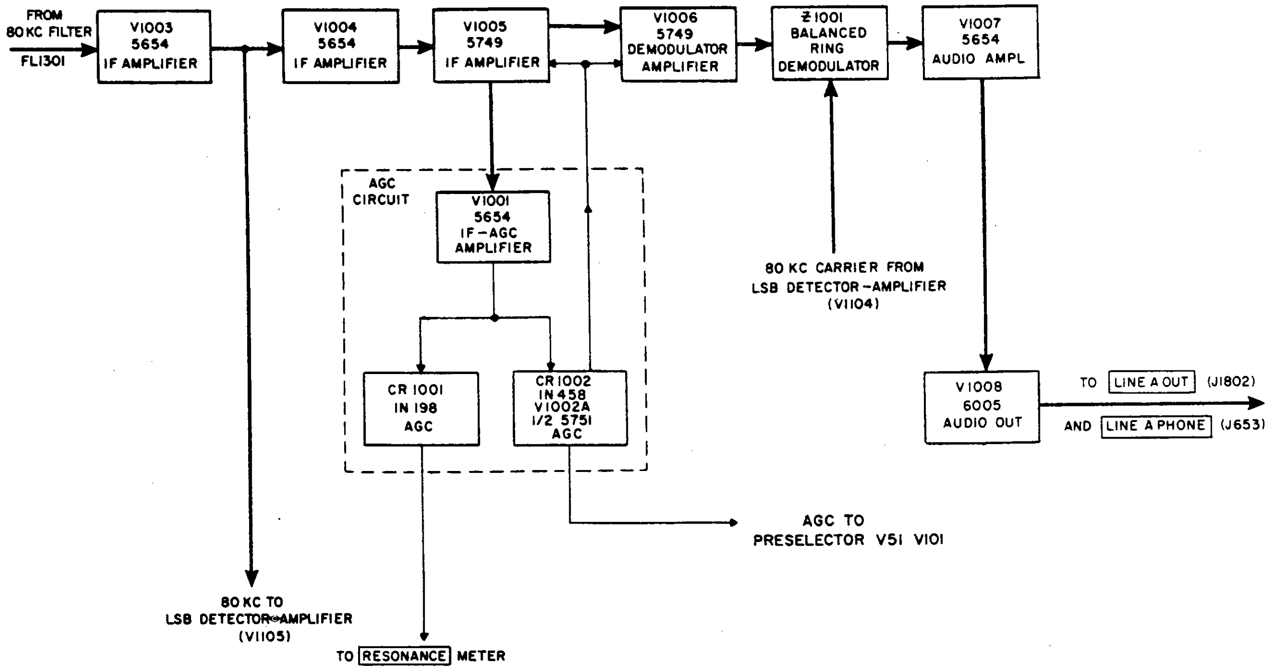

*Figure 4-26. Upper-Sideband Detector-Amplifier, Block Diagram*

functional block diagram. Lower-sideband operation is discussed in paragraph 4-10.

An input signal from the 80 kc filter is applied to a three-stage IF amplifier (V1003, V1004, and V1005). The amplified 80 kc output of V1003 is applied to both V1004 and the LSB detector-amplifier. The output of V1004 is applied to V1005, which, in turn, has two outputs. One is to demodulator amplifier V1006; the other is applied to IF-AGC amplifier V1001. The output of the latter is applied to diodes CR1001 and CR1002-V1002A. The rectified voltage from CR1001 is applied to RESONANCE meter M601; that from CR1002 and V1002A is fed back to provide gain control for both IF amplifier V1005 and demodulator amplifier V1006. Another output from CR1002 is applied through S654 and S657 to V51 and V101 of the preselector.

The output of V1006 is mixed in balanced-ring demodulator Z1001 with an 80 kc carrier signal. The audio frequency representing the difference between the signals is amplified by V1007 and V1008 and applied to LINE A OUT jack J1802 and LINE A PHONES jack J653.

*b.* IF AMPLIFIERS V1003, V1004, AND V1005. *(See figure 4-27.)*—The grid of V1003 receives its signal from the 80 kc filter through input connector J1001 and coupling capacitor C1013. The output of V1003 is developed across IF transformer T1002 and applied to IF amplifier V1004, also to the LSB detector-amplifier by way of connector J1002. The gain of V1003 is governed manually by the R.F. GAIN control on the lower converter panel and automatically by the voltage from

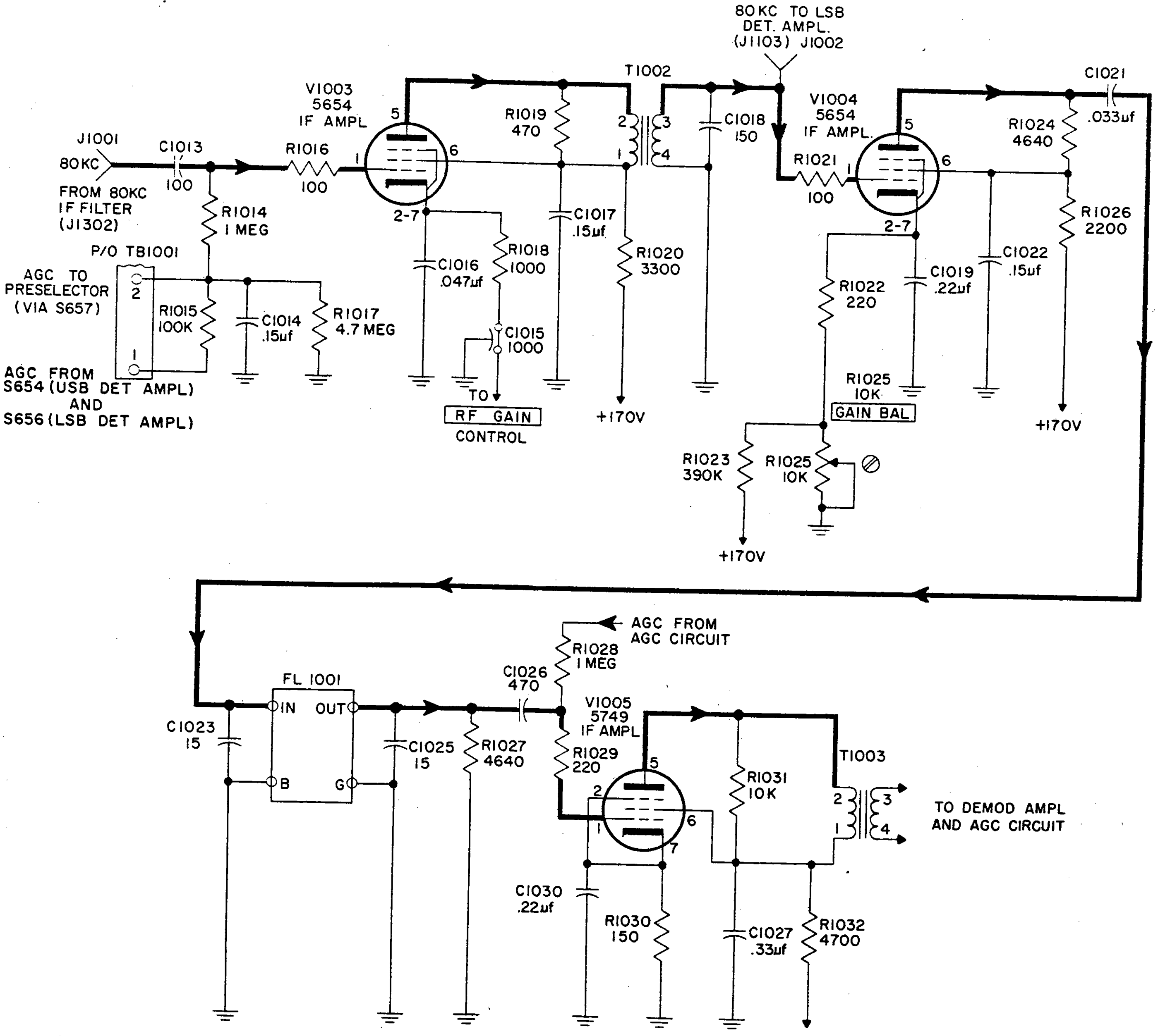

*Figure 4-27. IF Amplifiers V1003, V1004, and V1005, Simplified Schematic Diagram*

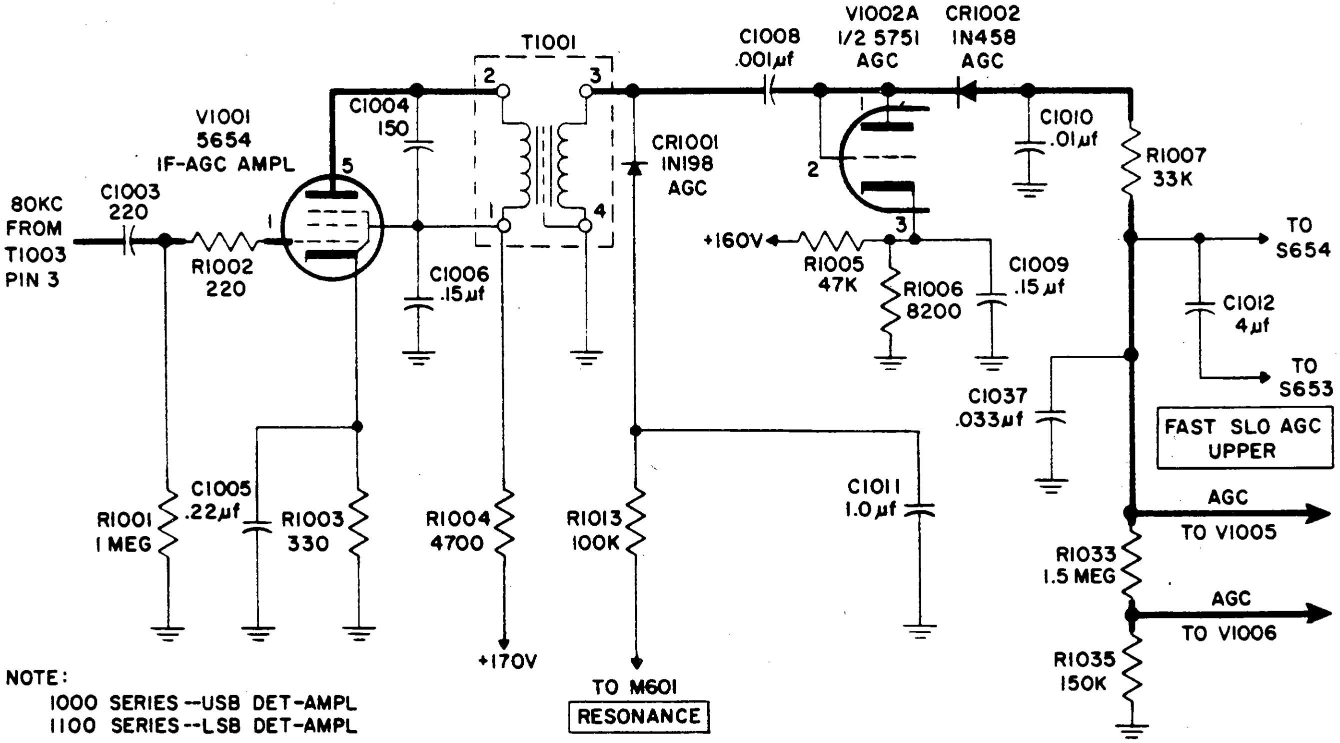

*Figure 4-28. Automatic Gain Control Circuits, Simplified Schematic Diagram*

the AGC control circuits of the USB and LSB detector-amplifiers.

V1004 amplifies the 80 kc signal from T1002 and develops an output across plate load resistor R1024. V1004 contains also, in its cathode circuit, GAIN BAL potentiometer R1025, which balances the gain with that of the IF amplifier in the LSB detector-amplifier. The output of V1004 is coupled to IF amplifier V1005 through bandpass filter FL1001.

FL1001 has an operating range of 76 kc to 79.7 kc, which has the false appearance of LSB operation because of the inversion of frequencies in the first frequency conversion. Here the HF oscillator operates at a frequency higher than that of the incoming signal. Since the original USB signal is the sum of the carrier and upper sideband, the mixing process results in a difference frequency that is lower than the 80 kc IF by the modulation components of the original USB signal. The original signal represented a carrier plus a modulation component; the converted signal represents an intermediate frequency minus that component. There is no inversion in the second and third conversions, because their local-oscillator frequencies are lower than the signal frequency; therefore, these conversions do not counteract the inversion of the first stage, and filter FL1001, with a bandwidth of 3.7 kc, is made to pass a band of frequencies covering 79.7 kc minus 3.7 kc. The output of FL1001 is applied to IF amplifier V1005, which develops an output across IF transformer T1003. The output at pin 3 of T1003 is applied to demodulator amplifier V1006 (figure 4-29) and to the AGC circuit (figure 4-28). The latter develops a control voltage which is fed back through isolating resistor R1028 to the grid of V1005 (figure 4-27).

*c.* AGC CIRCUITS. *(See figure 4-28.)*—The 80 kc signal from T1003 (plate load of V1005) is applied to IF AGC amplifier V1001 through capacitor C1003. The output of V1001 is developed across transformer T1001 and applied directly to diode CR1001 and through capacitor C1008 to diodes V1002A and CR1002.

During the negative portion of the input signal (at pin 3 of T1001), CR1001 passes current through resistor R1013 and RESONANCE meter M601 to ground. This negative signal is altered by capacitor C1011.

One output of V1002A and CR1002 is applied through A.G.C. UPPER switch S654 and S657 to V51 and V101 of the preselector.

A second output of V1002A and CR1002 provides cascade voltage doubling for delayed AGC in V1005 (par. 4-9*b*) and V1006 (par. 4-9*d*), the amount of delay depending on the positive bias voltage applied to the cathode of V1002A. When received signals are weak, no AGC voltage is developed, and the receiver is in its most sensitive state. On strong inputs, the bias voltage at V1002A is nullified and the AGC voltage doubler activated. During the positive half-cycle of a strong input, V1002A charges capacitor C1008 to the peak value of the input signal. On the negative halfcycle, the voltage across C1008 is in series with the negative voltage at the secondary of T1001 and the sum voltage is impressed on CR1002, charging capacitor C1010 to the sum voltage (double the peak value of the input signal).

The voltage across C1010 is applied to V51 and V101 of the preselector, to V1005, and to V1006. AGC reaction time is fast (C1010) or slow (C1012), depending on the position of A.G.C. UPPER SLOW/FAST switch S653 on the lower demodulator panel. For SSB operation, both capacitors charge quickly for fast attack and discharge slowly through resistors R1033 and R1035.

**Note**

> Figure 4-28 is the schematic diagram for the AGC circuits of both the USB and LSB detector amplifiers. These circuits are identical except for symbol reference designations. Numbers on the figures in the 1000 series refer to the upper sideband; those in the 1100 series refer to the lower. Both series are shown on the diagram.

*d.* DEMODULATOR AMPLIFIER V1006, BALANCED-RING DEMODULATOR.*(See figure 4-29.)*—Demodulator amplifier V1006 receives its signal from IF amplifier V1005 by way of transformer T1003 and capacitor C1029. The plate load of V1006 is in balanced-ring demodulator Z1001, which, in addition, detects the USB IF signal. A second input to Z1001 is the 80 kc carrier from carrier amplifier stage V1104 of the lower-sideband detector-amplifier. Combining the two inputs in Z1001 results in outputs containing original frequency and difference frequency components. Z1001 by-passes all but the difference frequency and applies it to audio amplifier V1007 by way of A.F. LEVEL LINE A potentiometer R651.

*e.* AUDIO AMPLIFIERS V1007 and V1008. *(See figure 4-30.)*—Audio amplifier V1007 and V1008 are audio output stages. The level of input to V1007 is controlled by R651, and the amplified output of V1007 is developed across plate load resistor R1043 and applied to V1008 through capacitor C1036. The output of V1008 is developed across output transformer T1004, which is common to the USB and AM detector-amplifiers. Only one of these sections operates at a time, the selection being made by the RECEPTION A.M./S.S.B. switch on the lower demodulator panel. T1004 has two secondary, or output, windings, one to LINE A OUT, the other to LINE A PHONES.

Both audio amplifiers have negative feedback. That of V1007 is from the plate circuit of V1008 through filter network R1040, C1032, and R1041, plus another feedback from its unbypassed cathode resistor (also R1041). In addition, R1041 is part of a voltage-divider network (with R1039) between B+ and ground, which supplies V1007 with a fixed bias voltage. V1008 gets its feedback from its unbypassed cathode resistor, R1046.

## 4-10. LSB DETECTOR-AMPLIFIER

*(See figure 4-31.)*

*a.* GENERAL.—Tubes V1105 and V1106 comprise a two-stage IF amplifier receiving an 80 kc input from the USB detector-amplifier. It has two amplified 80 kc outputs, one to IF-AGC amplifier V1101, the other to demodulator amplifier V1107.

The output of V1101 is applied to diode CR1101 and AGC diodes CR1101-V1102A. The rectified voltage from CR1101 is applied through R1113 to resonance meter M601. CR1102-V1102A has two outputs. One is fed back to provide gain control for V1106 and V1107. The other is applied through S656 and S657 to the RF amplifiers in the preselector section.

The output of V1107 is applied to balanced-ring demodulator Z1101, where it is mixed with an 80 kc carrier signal from the synthesizer section by way of carrier amplifier V1104. The difference between the 80

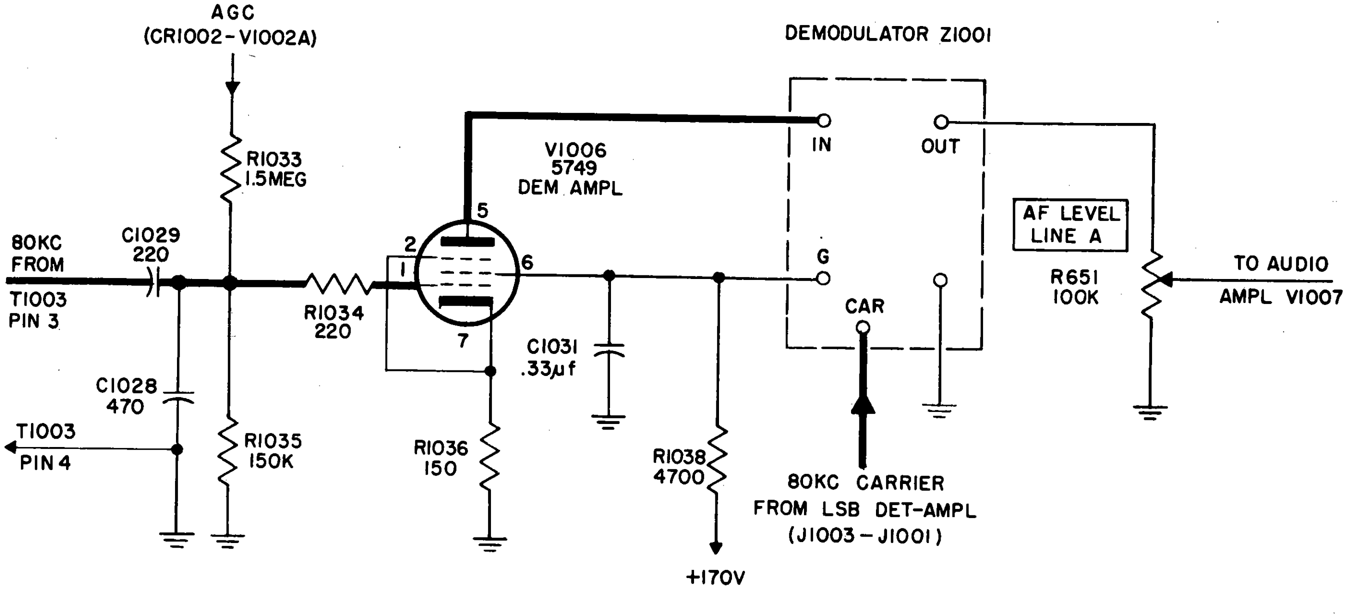

*Figure 4-29. Demodulator Amplifier V1006 and Balanced-Ring Demodulator Z1001, Simplified Schematic Diagram*

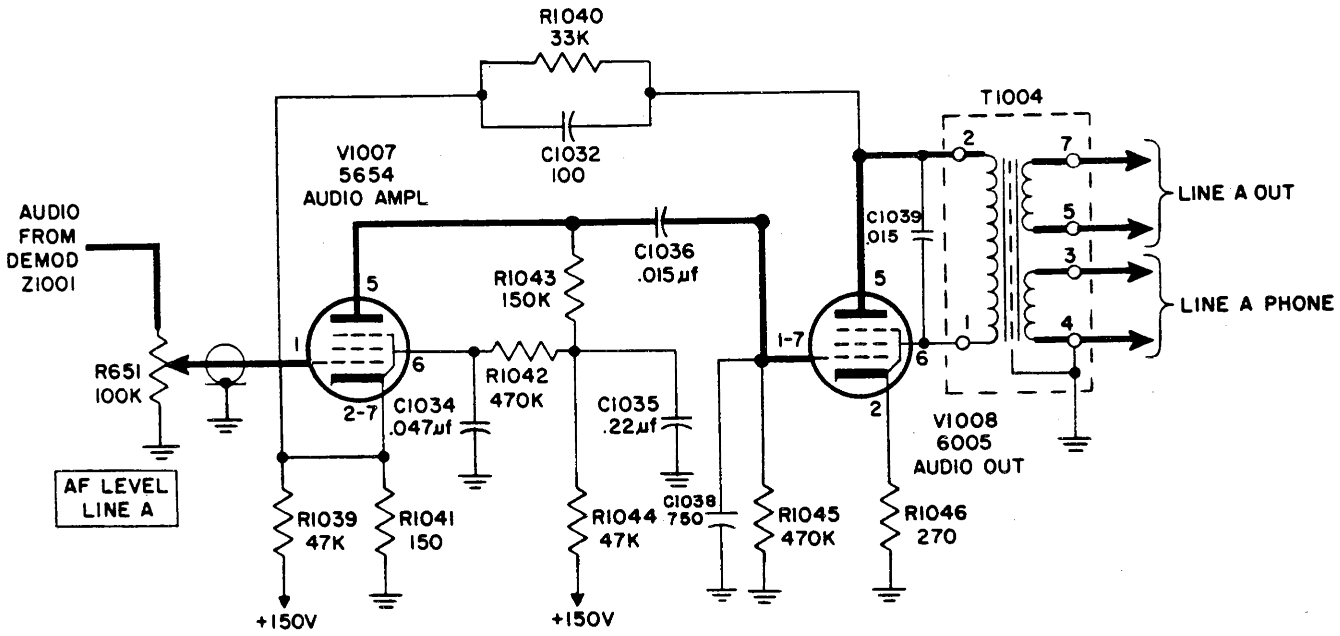

Figure 4-30. Audio Amplifiers V1007 and V1008, Simplified Schematic Diagram

kc carrier and 80 kc IF signal is the audio frequency which is amplified by V1108 and V1109 applied to LINE B OUT connector J1803 and LINE B PHONE connector J652.

*b.* IF AMPLIFIER V1105-1106. *(See figure 4-32.)*—The control grid of V1105 receives its 80 kc input from the USB detector-amplifier through connector J1103. The amplified output is developed across plate load resistor R1127 and applied through coupling capacitor C1122 to bandpass filter FL1101, which has an operating bandwidth of 80.3 kc to 84 kc.

As in the case of USB bandpass filter FL1001 (see par. 4-9*b*), the operating range of FL1101 suggests a contradiction, as if it were in the upper instead of the lower sideband. Again, the condition results from inversion in the first three frequency conversions. Here the difference between the HF local oscillator signal and the incoming LSB signal is an 80 kc IF carrier plus the modulating component, which remains inverted after two more frequency conversions. The result is that the range of FL1101 is 3.7 kc above the 80 kc carrier frequency of the LSB IF amplifier. Similarly, GAIN BAL potentiometer R1128 serves the same purpose in varying the bias on tube V1105 as R1025 does for V1004 in the USB IF amplifier (see par. 4-9*b*). Screw-type adjustments permit both amplifiers to provide essentially the same output level.

The output of FL1101 is applied through coupling capacitor C1127 to IF amplifier V1106, the amplified output of which is developed across IF transformer T1102 and fed to demodulator amplifier V1107 (figure 4-34) and the AGC circuit (figure 4-28). The gain of V1106 is governed manually, by the R.F. GAIN control on the lower converter panel, and automatically, by the negative voltage developed by the AGC circuits of the LSB detector-amplifier.

*c.* LSB DETECTOR-AMPLIFIER AGC CIRCUITS. *(See figure 4-28.)*—The operation of the AGC circuits of the USB and LSB detector-amplifiers is identical. Refer to sub-paragraph 4-9*c* for a discussion of both. Figure 4-28 is a schematic diagram of both circuits. Symbol reference designations in the 1000 series refer to the USB circuits; those in the 1100 series refer to the lower sideband.

*d.* CARRIER AMPLIFIER V1104. *(See figure 4-33.)*—Carrier Amplifier V1104 is a dual-triode tube, the paralleled grids of which receive their 80 kc input from the synthetizer section via J1102 and C1116. The amplified output of triode A is developed across plate load resistor R1120 and applied via capacitor C1119 to CAR terminal of balanced ring demodulator Z1101 of the LSB detector-amplifier. The amplified output of triode B is developed across plate load resistor R1116 and applied to balanced-ring demodulator Z1001 of the USB detector-amplifier by way of coupling capacitor C1115 and connectors J1101 and J1003.

*e.* DEMODULATOR AMPLIFIER V1107, BALANCED-RING DEMODULATOR Z1101. *(See figure 4-34.)*—Demodulator amplifier V1107 receives its input signal from IF amplifier V1106 (T1102) through capacitor C1130. The plate load impedance of V1107 is in demodulator Z1101, which in addition detects the LSB IF signal. A second input to Z1101 is the 80 kc inserted carrier from carrier amplifier V1104. When Z1101 receives no IF signal at its IN terminal it has no output, but when there is an IF input at IN, the combination of IF signal and 80 kc carrier results in output

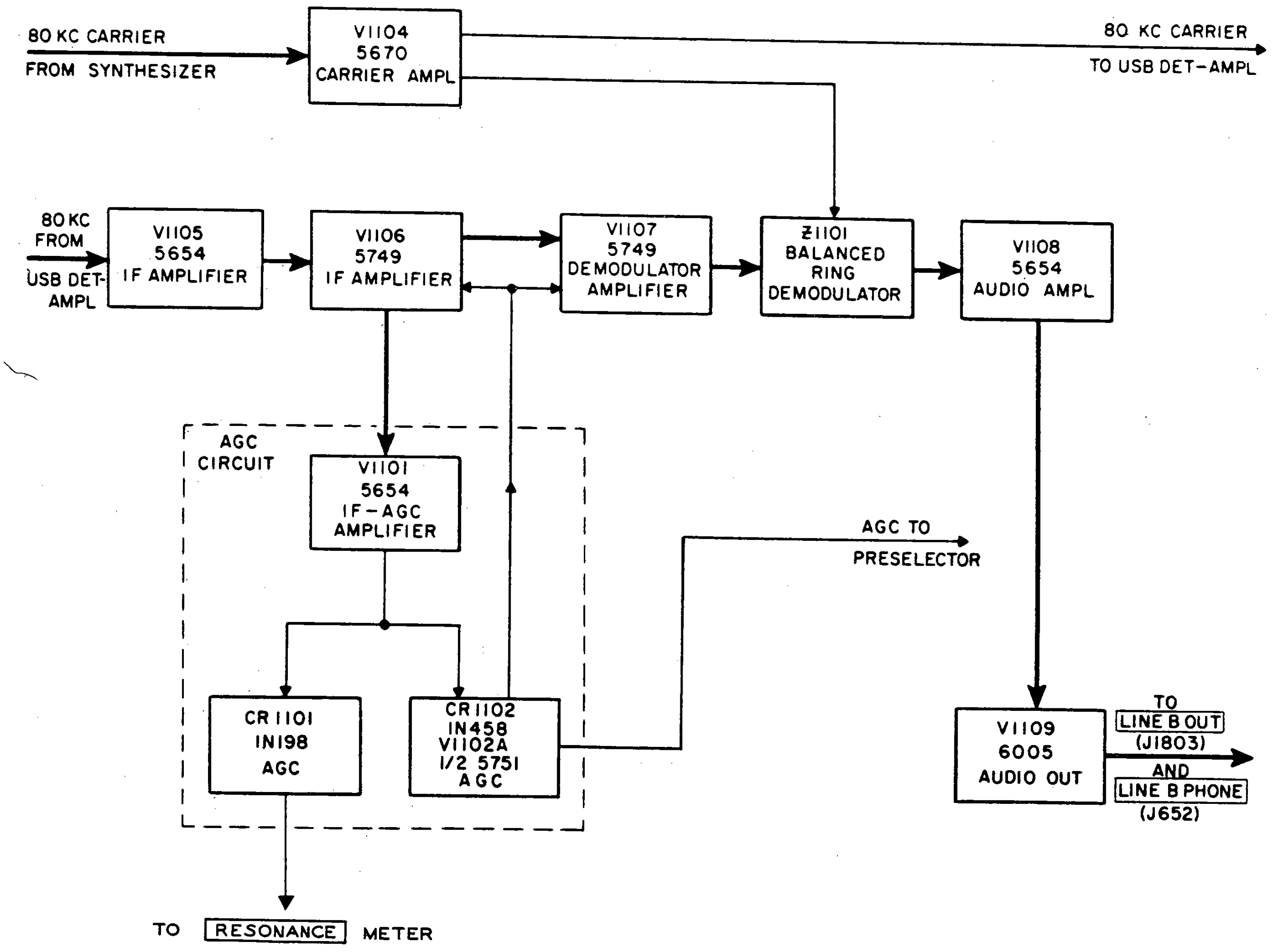

*Figure 4-31. LSB Detector-Amplifier, Block Diagram*

signals of sum and difference frequencies. Z1101 bypasses the sum frequencies and applies the difference frequencies to audio amplifier V1108 (figure 4-35) through AF LEVEL LINE B potentiometer R652.

*f.* AUDIO AMPLIFIERS V1108 AND V1109. *(See figure 4-35.)*—The input audio level selected by AF LEVEL LINE B potentiometer R652 is applied to the control grid of audio amplifier V1108, the output of which is developed across plate load resistor R1146 and applied to audio output amplifier V1109 through capacitor C1137. The output of V1109 is developed across output transformer T1103 which has two secondary or output windings, one to the LINE B OUT jack and the other to the LINE B PHONES jack.

Both amplifiers have negative feedback. That of V1108 is from the plate circuit of V1109 through filter network R1143, C1133, and R1144, plus another feedback from its unbypassed cathode resistor (also R1144). In addition, R1144 is part of voltage-divider network (with R1142) between B+ and ground, which supplies V1108 with a fixed bias. Amplifier V1109 gets its negative feedback from unbypassed cathode resistor R1149.

Figure 4-36 shows how the USB and LSB detector-amplifiers can be connected, singly or jointly, to a voltage-divider network consisting of resistors R1015 and R1017. The selection is made by the ON/OFF switches labeled A.G.C. UPPER (S654) and A.G.C. LOWER (S656) on the lower demodulator panel. If only one of these switches is in ON position, AGC voltage from that sideband only is applied to the divider network. The AGC voltage actually applied to USB IF amplifier V1003 and preselector RF amplifiers V51 and V101 is the voltage across R1017 of the voltage divider network. This AGC voltage is reduced from the total available at TB1001-1 because of the sharp cutoff characteristic of the type 5654 tubes used, and also to prevent front-end gain reduction and the possible loss of weak signals.

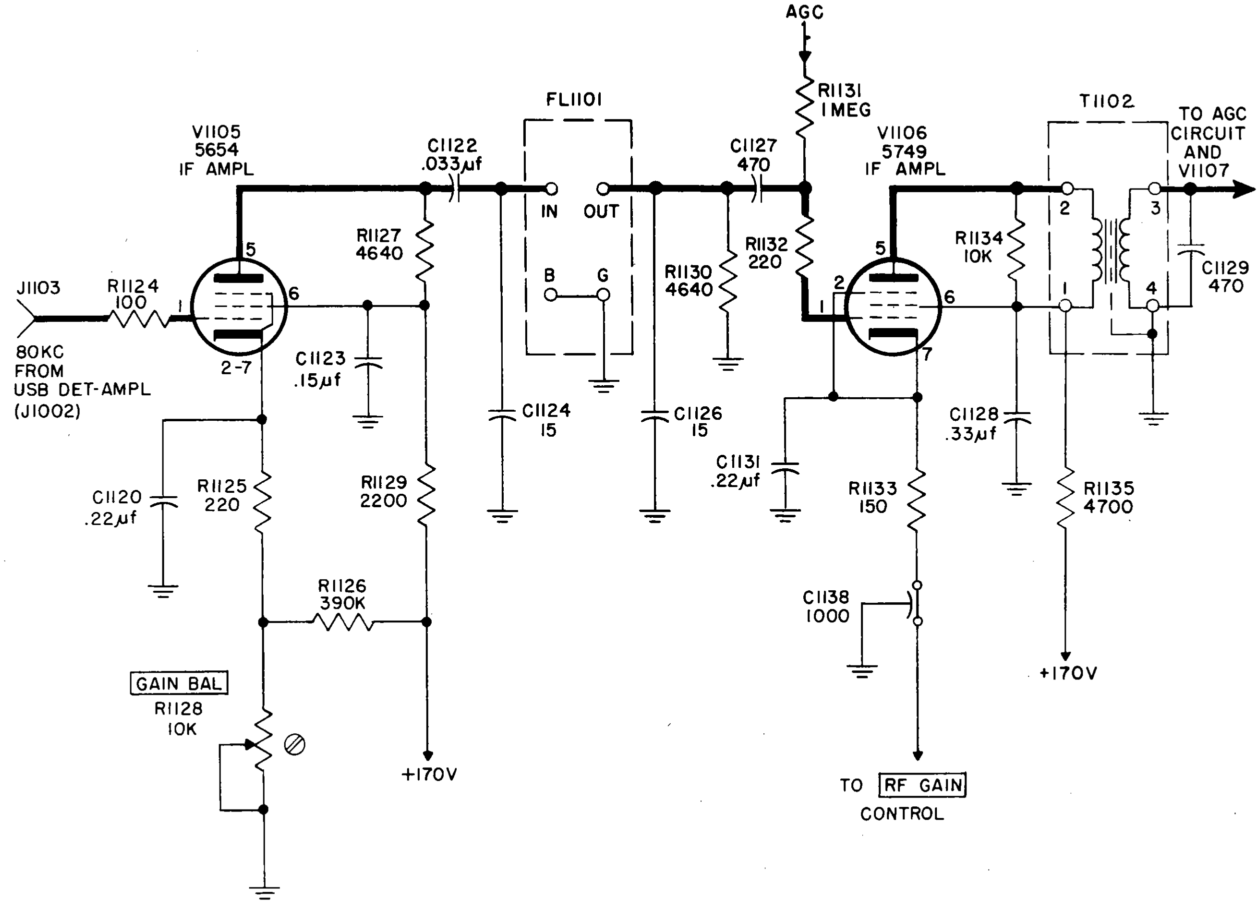

Figure 4-32. IF Amplifiers V1105 and V1106, Simplified Schematic Diagram

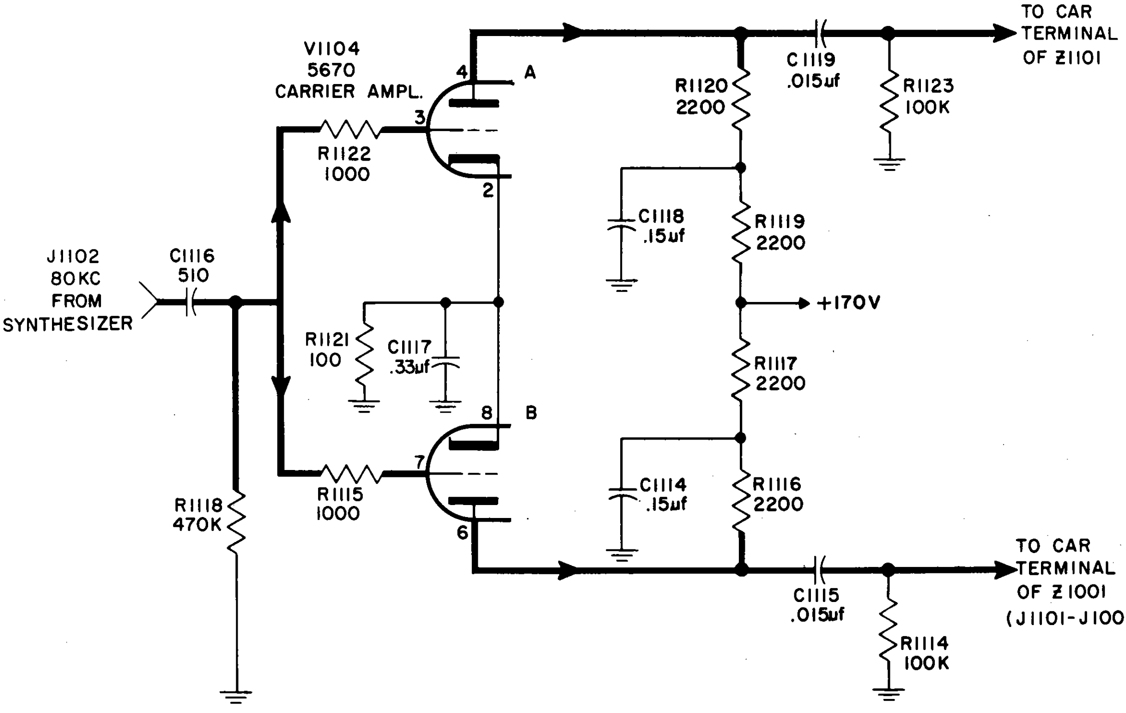

Figure 4-33. Carrier Amplifier V1104, Simplified Schematic Diagram

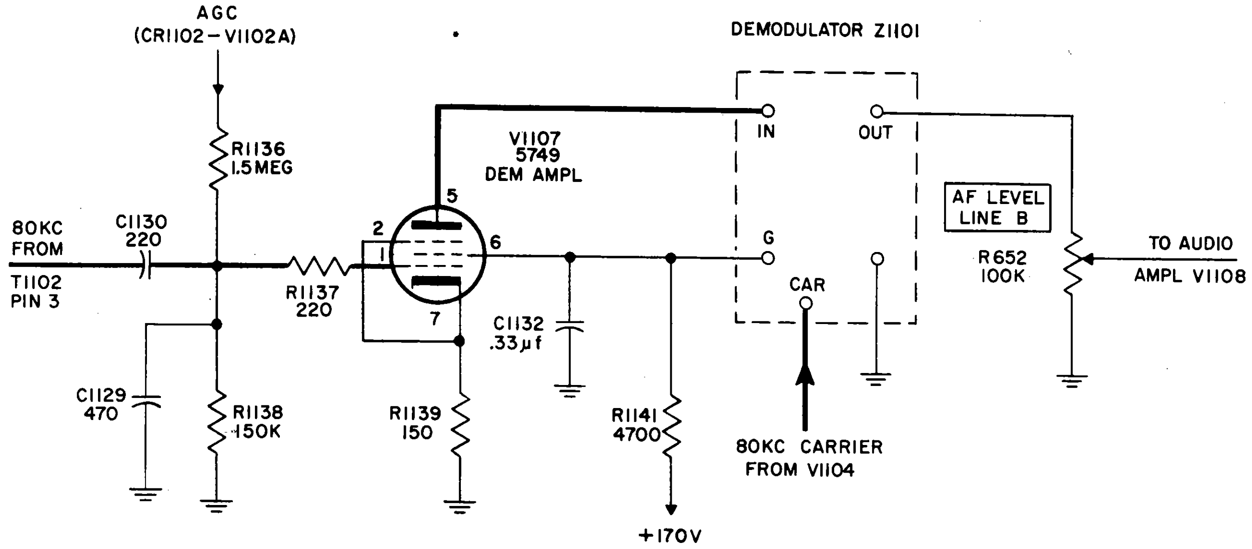

*Figure 4-34. Demodulator Amplifier V1107 and Balanced-Ring Demodulator Z1101, Simplified Schematic Diagram*

With both switches ON during simultaneous USB and LSB reception, AGC voltages from both units are applied to the divider.

## 4-11. CRYSTAL OSCILLATOR.

*(See figure 4-37.)*

The crystal oscillator section generates the standard 1 mc frequency for operation of the spectrum generator and frequency dividers. The stability of the receiver is related directly to that of the oscillator (1 part in $10^7$). The crystal oscillator section consists of three major circuits—the oven oscillator-amplifier, the crystal oscillator-amplifier, and the frequency dividers. Figure 4-37 shows the functional relationship of these circuits, each of which is discussed in signal sequence in the following subparagraphs.

*a.* OVEN OSCILLATOR-AMPLIFIER. *(See figure 4-38.)*—The oven oscillator-amplifier circuit is a fixed-frequency audio amplifier with a positive feedback which produces circuit oscillation. Power produced by the oscillator is applied to the heating elements of crystal oven assembly A701.

The temperature of the crystal oven is controlled by the proportional method, which is continuous, as opposed to the thermostatic, which is marked by step effects. When the desired temperature is reached, bridge arms come into balance and provide only enough feedback signal to maintain that temperature. A deviation

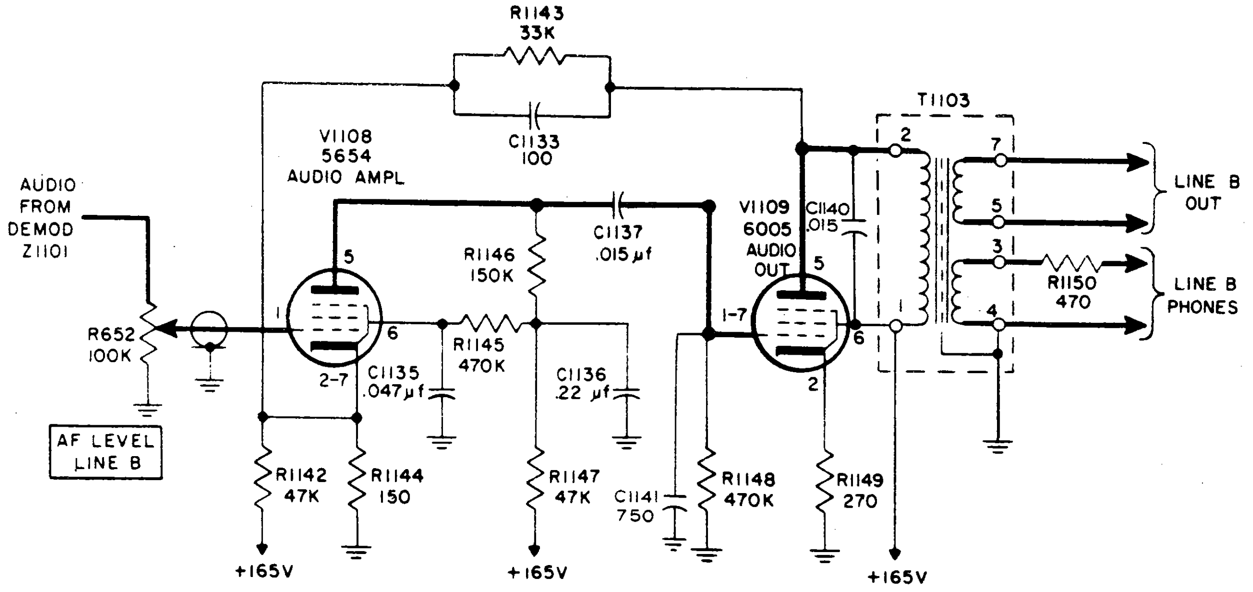

*Figure 4-35. Audio Amplifiers V1108 and V1109, Simplified Schematic Diagram*

in temperature will cause an imbalance and subsequent correction. The procedure is as follows:

Tube V701 operates as the oscillator stage. Its plate-tuned circuit is the result of L701 and C703 determining the oscillation frequency. When the circuit is energized, a positive feedback signal from the oven heaters is applied to the grid of V701 (pin 1), producing oscillations about 2 kc. Tube V702 is an amplifier stage which isolates the oscillator from the driver stage. The buffer output signal developed at R708 is applied through coupling capacitor C708 and grid resistor R710 to driver V703. Output transformer T701 couples the output power of V703 to the heating elements of the oven assembly. There are four of these elements, forming a bridge circuit. Two terminals of the four-terminal bridge connect to the output of T701; the other two provide an output signal proportional to oven temperature. This signal is fed back to V701 with polarity suited to produce oscillation. The size of the feedback voltage determines the level of heater power (and oven temperature).

In case of failure of the heater control circuit, contents of the oven are protected against overheating by a thermo switch connected across the heater terminals. Its contacts are normally open; when closed they divert heater power.

Capacitor C711 couples the output signal of the driver to voltage-divider resistors R713 and R714. The signal reduced at the junction of the resistors, is applied to diode CR701, which operates the PHASE OR TEMP meter through multiplier resistor R715. Capacitor C714 by-passes the ripple component around the meter, which measures signal level at the output of V703. Since this level is linked to oven temperature, it provides an accurate measure of that temperature.

The 1 mc crystal and related components mounted in

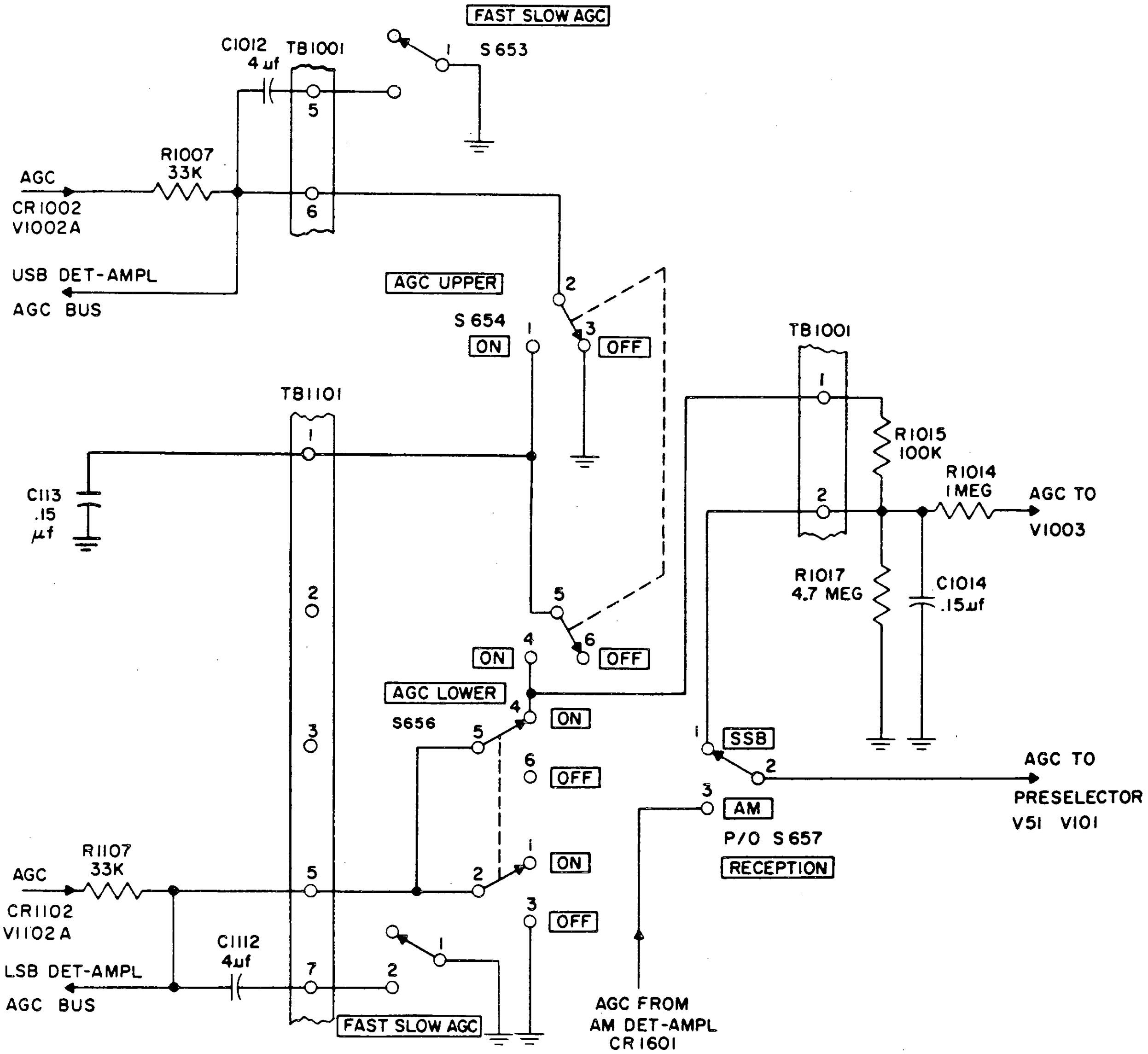

*Figure 4-36. USB and LSB AGC Interconnections, Simplified Schematic Diagram*

the oven are also parts of the oven assembly but not functional parts of the oven oscillator-amplifier circuit; therefore they have been omitted from figure 4-38. The complete oven is mounted in a Dewar flask similar to a vacuum bottle. The flask is protected against shock by a fiberglas blanket and mounted in a steel container. This assembly is a single unit; components cannot be removed for individual repair or replacement.

*b.* CRYSTAL OSCILLATOR-AMPLIFIER. *(See figure 4-39.)*—The crystal oscillator-amplifier circuit produces the standard 1 mc frequency from which, through division, the 100 kc output of the crystal oscillator section is derived. It consists of crystal oscillator V704, 1 mc amplifier V705, and buffer V706.

The oscillator is a Pierce type, and its 1 mc basic frequency is determined by crystal Y1, connected from the plate to the grid of the oscillator through blocking capacitor C1. Tuning capacitor C719 permits small adjustments in oscillator frequency to conform to an external primary standard. V705 follows the oscillator and amplifies the 1 mc signal. Plate inductance L704 is tuned to 1 mc and is the tank circuit for the amplifier. Buffer V706 provides further signal amplification and isolates the oscillator circuits from the frequency-divider section which follows. The output of V706 is developed in its cathode circuit and is applied to the frequency divider through S701.

The 1 mc amplifier includes an amplitude-control circuit to provide an unvarying 1 mc signal. Diode CR702 receives a portion of the signal from the plate circuit of V705 through coupling capacitor C723. Besides the 1 mc signal, a dc bias of reverse polarity is applied to CR702 from the receiver power supply through a voltage-divider network consisting of R724 and R729. If the dc bias prevents diode conduction, C723 supplies the 1 mc signal to the grid of V704 through resistors R716 and R719. The phase of this feedback promotes oscillation. When the signal from V705 exceeds the blocking bias, CR702 conducts, applying a rectified voltage, produced at load resistor R725, as a negative bias to the grid of V704, reducing the 1 mc signal level. Balance is maintained between the 1 mc signal feedback and the rectified voltage of CR702, and the balance keeps the 1 mc signal amplitude constant at the output of V706.

When a signal from an external standard is applied at connector J709, it combines with the 1 mc crystal oscillator signal at the junction of coupling capacitors

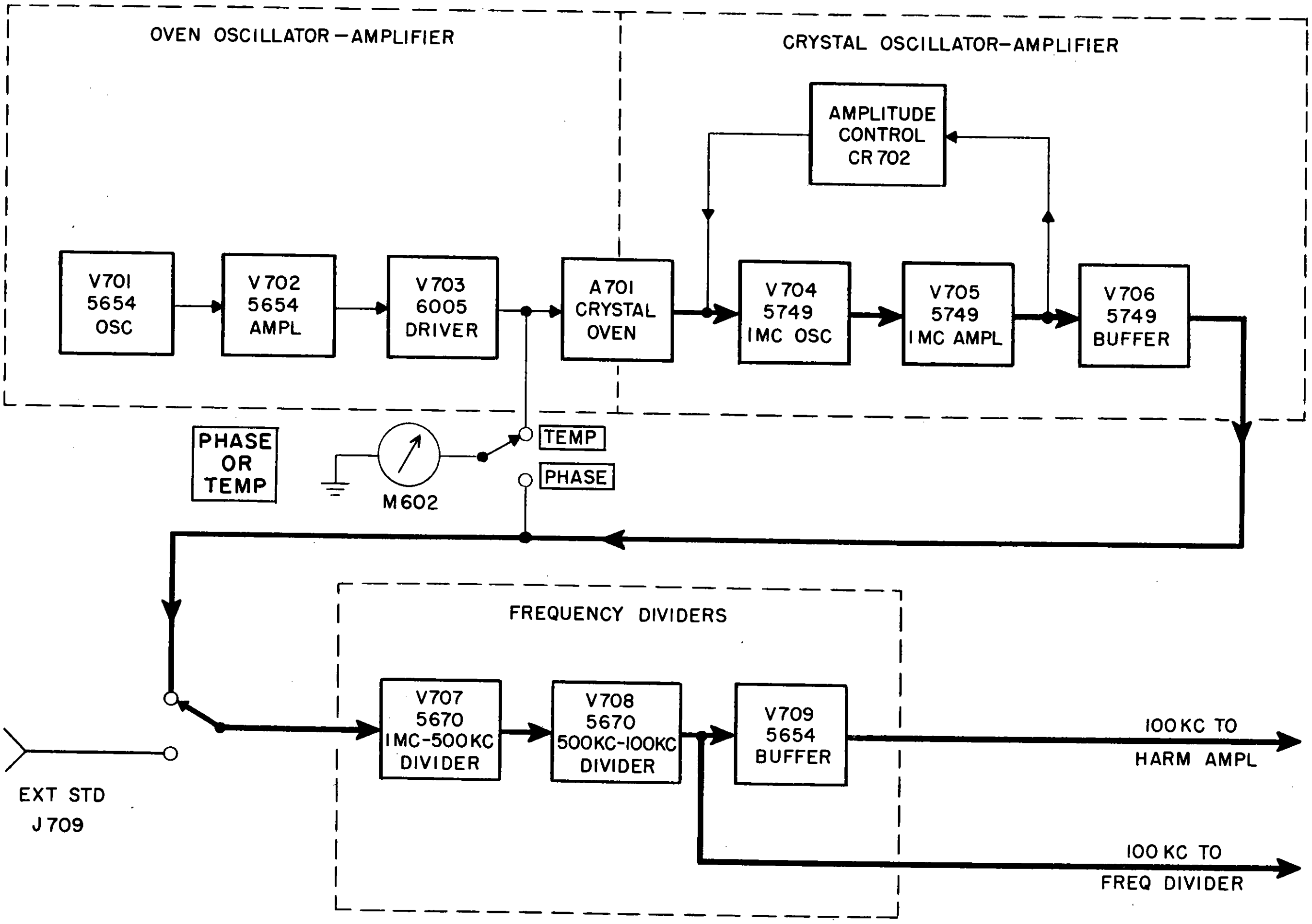

*Figure 4-37. Crystal Oscillator, Block Diagram*

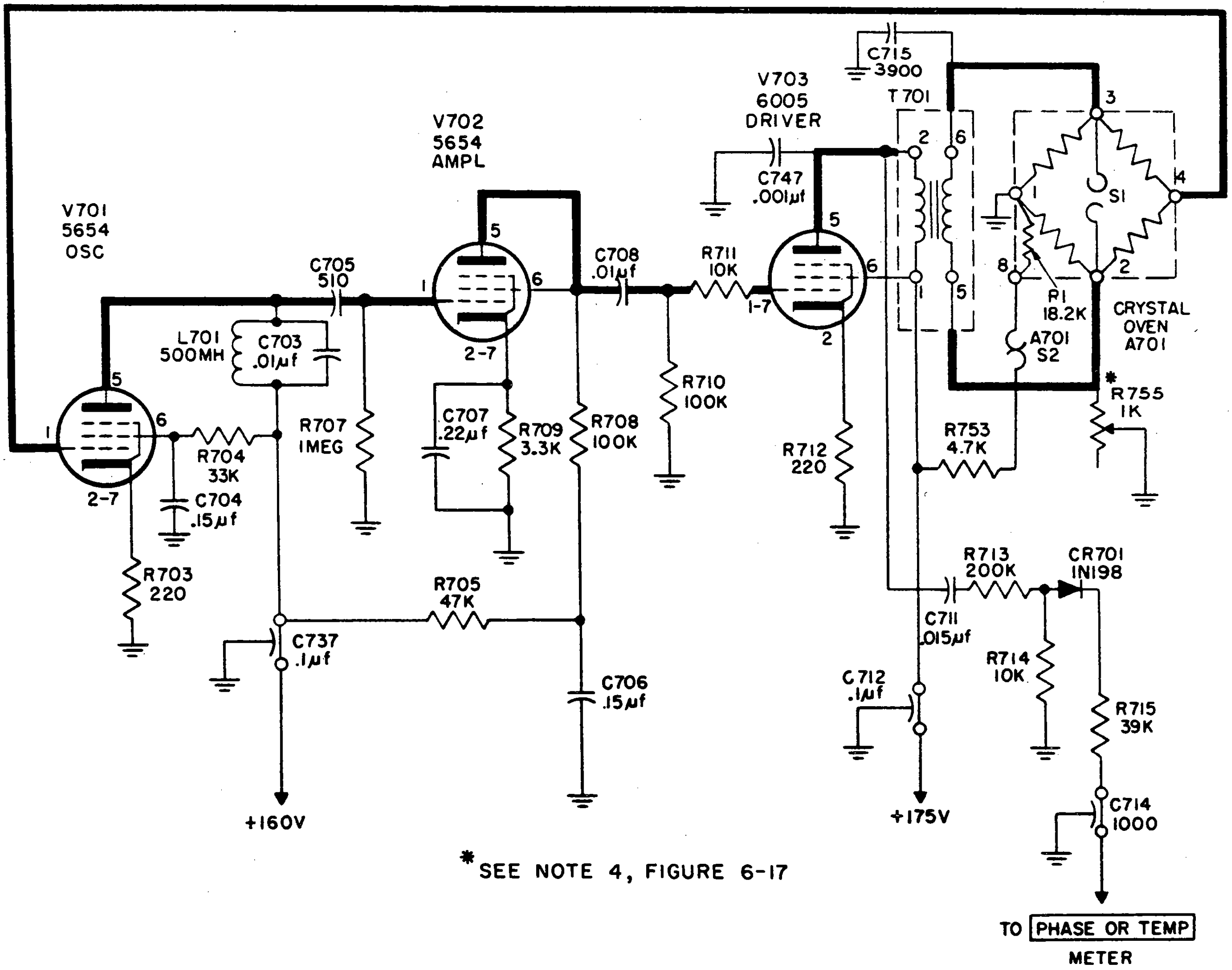

*SEE NOTE 4, FIGURE 6-17

Figure 4-38. Oven Oscillator-Amplifier, Simplified Schematic Diagram

C728 and C730. If the two signals are of identical frequency and phase, the PHASE OR TEMP meter (reading PHASE) will produce a steady reading; if they differ in frequency, the resultant phase difference will cause the meter reading to fluctuate at a rate determined by the frequency difference or beat between the signals. When standardizing the crystal oscillator, adjust capacitor C719 for a steady meter reading. The coincidence of the two signals is measured by timed observations of the meter fluctuation in response to the beat frequency.

The foregoing applies with FREQ. STANDARD switch S701 in INT. STD. position. Placing the switch in EXT. STD. permits an external standard to be used in place of the crystal oscillator-amplifier section by cutting the frequency-divider circuits from V705 and V706 and connecting them directly to J709.

*c.* FREQUENCY DIVIDERS V707 and V708, BUFFER V709. *(See figure 4-40.)*—The frequency dividers derive a 100 kc signal from the 1 mc input from the crystal oscillator-amplifier circuit. V707 makes the first division to 500 kc, and V708 the second division to 100 kc. V707 is a locked-oscillator with a tuned circuit, L705 and C736, at its output grid (pin 7) tuned to 500 kc. V708 has a similar circuit, L706, tuned by capacitors C740 and C741 to 100 kc. These capacitors serve also as a signal divider supplying buffer amplifier V709. The buffer amplifies the 100 kc signal and applies it to the harmonic amplifier section by way of output connector J707. It also isolates the frequency divider section from the harmonic amplifier. L707 in the plate circuit of V709 is tuned to 100 kc. Output connector J705 provides a 100 kc signal for the frequency divider section and J707 a 100 kc signal for the harmonic amplifier input.

## 4-12. HARMONIC AMPLIFIER AND MIXER.

*(See figure 4-41.)*

The harmonic amplifier and mixer produce a 100 kc spectrum from the frequency range of 2.9 mc to 32.9 mc when driven by the 100 kc signal from the crystal oscillator section. Basically, the harmonic amplifier and mixer section consist of a harmonic generator, tuned

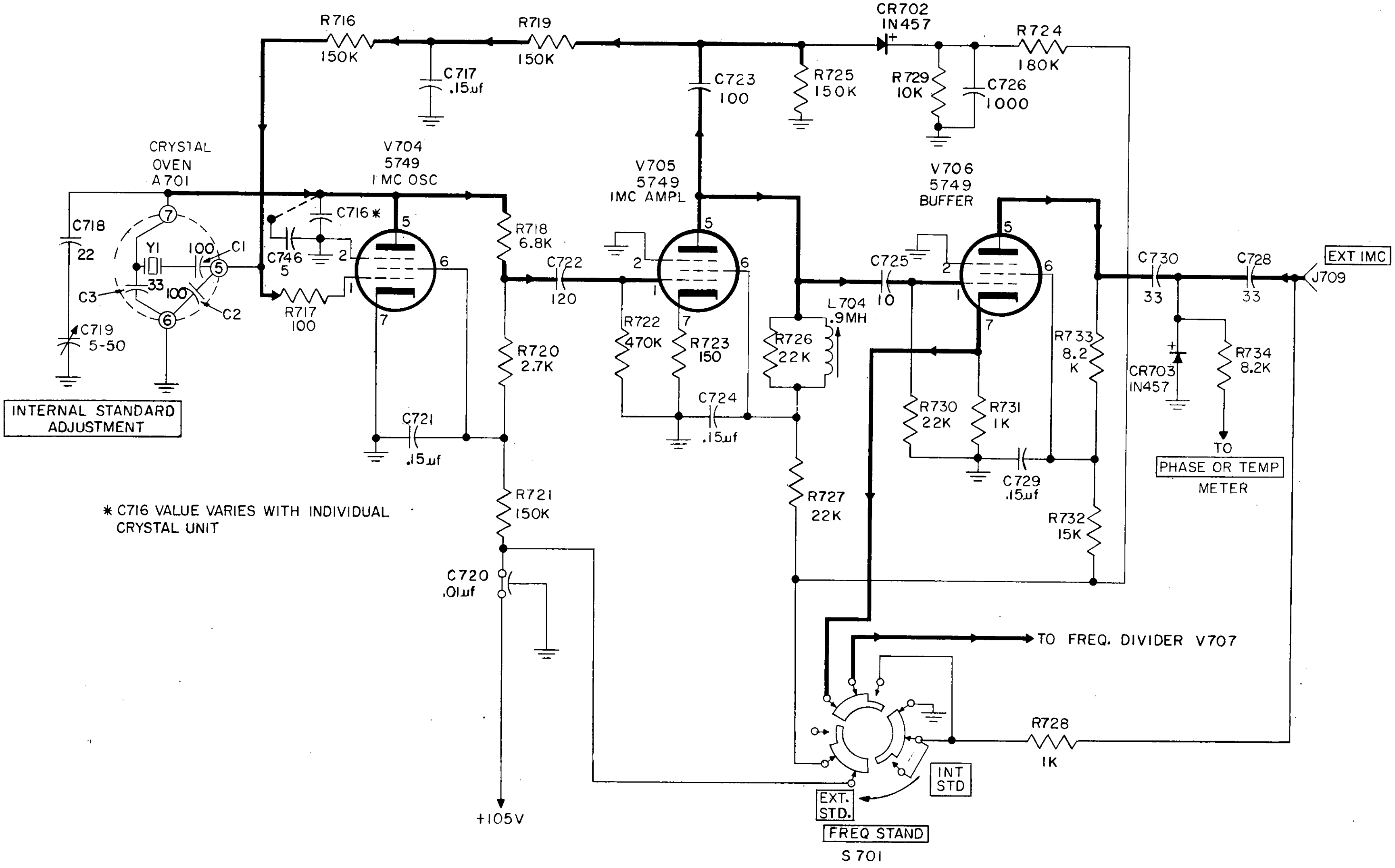

* C716 VALUE VARIES WITH INDIVIDUAL CRYSTAL UNIT

Figure 4-39. Crystal Oscillator-Amplifier, Simplified Schematic Diagram amplifier stages, and an output mixer. The mixer combines the generated spectrum with a signal from the high-frequency oscillator for incremental tuning at 100 kc intervals. The tuning controls of the HF oscillator and harmonic amplifier and mixer sections are ganged for simultaneous operation.

As shown in figure 4-41, the 100 kc signal from the crystal oscillator section is applied to harmonic generator diode CR201 through connectors J707 and J201 and resistor R201. The signal-clipping action of CR201 provides the control grid (pin 1) of harmonic amplifier V201 with a wide range of harmonics from the 100 kc input signal. The operating frequency is selected by the tank circuit in the plate of V201. This tank circuit is tuned simultaneously with the tuned circuits of the HF oscillator section. The functional relationship between these sections is explained in the subparagraph on incremental tuning (4-1*f*). The output of V201 is applied to a second harmonic amplifier (V202) where again the signal amplitude is increased and applied to mixer V251 (pin 1). Mixer V251 combines this selected harmonic signal with a signal from the HF oscillator applied at jack J301. These two signals are mixed and produce a difference frequency of 825 kc which is available at output connector J252. The plate load of V251 is physically located in the injection IF amplifier section.

## 4-13. HIGH-FREQUENCY OSCILLATOR V301.

*(See figure 4-42.)*

High-frequency oscillator (HFO) V301 covers a frequency range of 3.725 mc to 33.725 mc in four bands. Its outputs are used in the preselector for the first frequency conversion and in the harmonic mixer for the 825 kc signal used by the injection IF amplifier section. The schematic diagram shows the HFO as it appears in band 1 operation (2.0 mc to 4.0 mc). The HFO is a

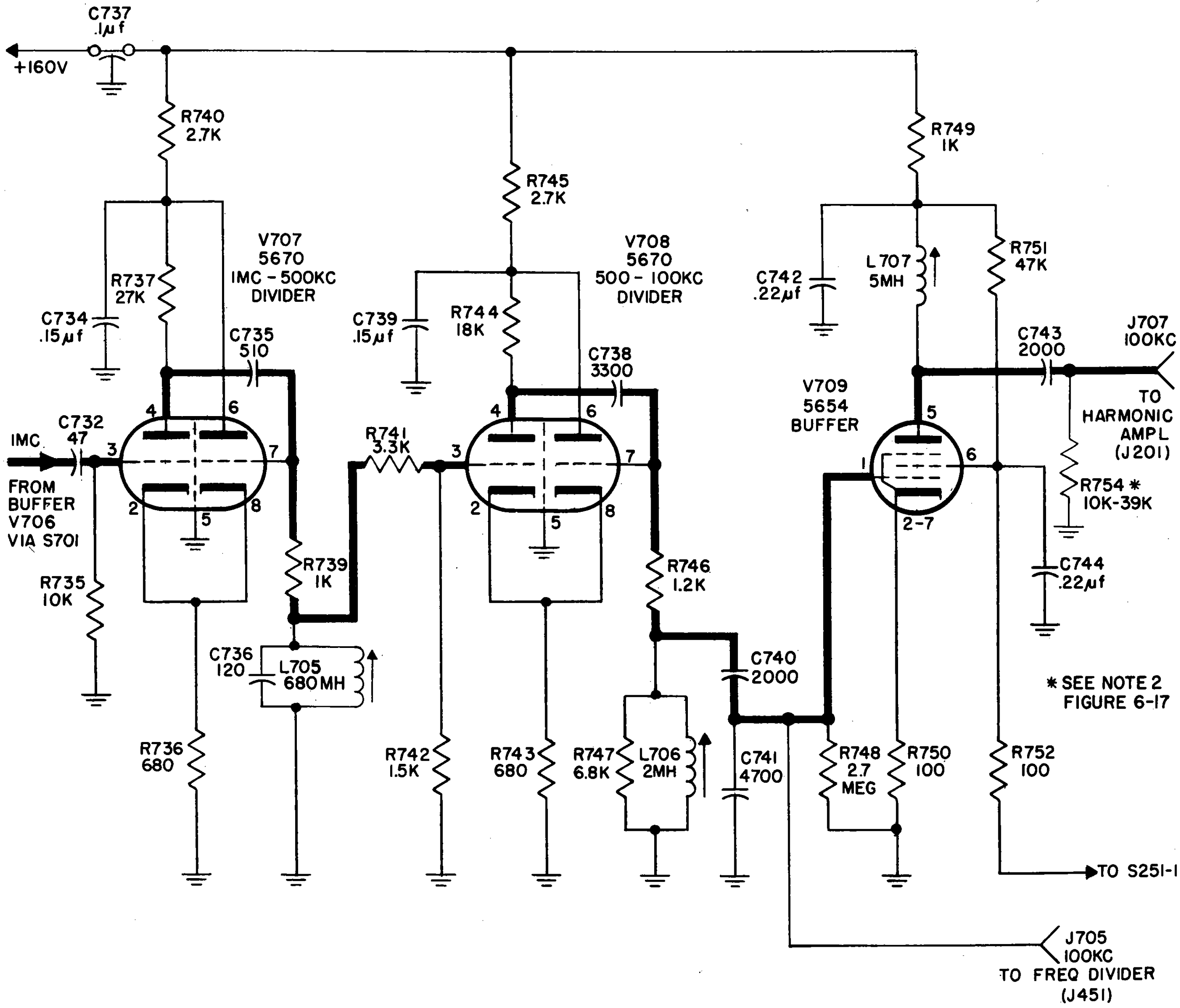

*Figure 4-40. Frequency Dividers V707 and V708 and Buffer V709, Simplified Schematic Diagram*

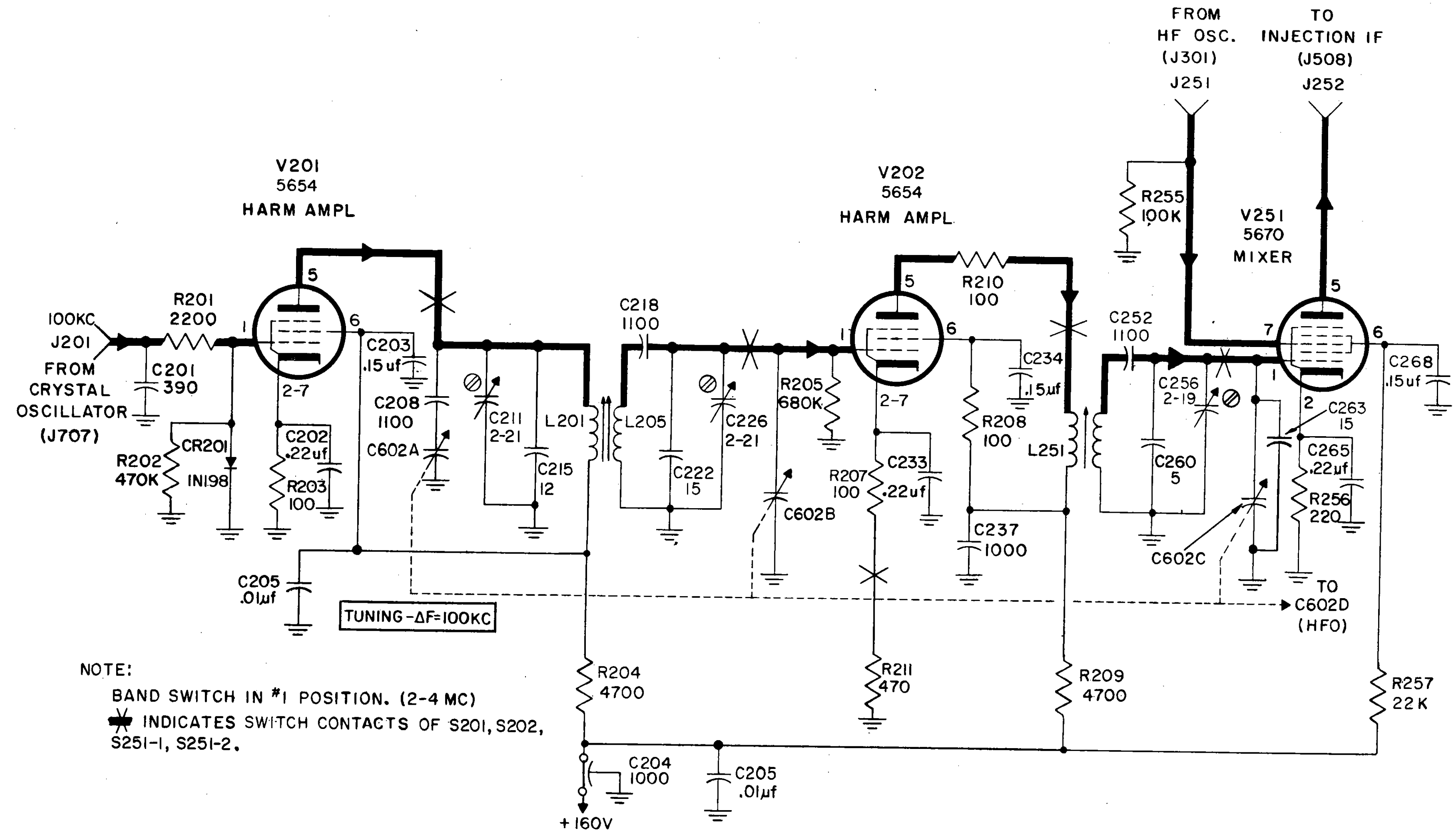

NOTE:
BAND SWITCH IN #1 POSITION. (2-4 MC)
✕ INDICATES SWITCH CONTACTS OF S201, S202,
S251-1, S251-2.

Figure 4-41. Harmonic Amplifier and Mixer, Simplified Schematic Diagram modified grid-tuned Armstrong circuit with cathode feedback. Coil L301 includes both the tuned-grid and feedback windings. Connector J301 provides an output to harmonic mixer V251 via connector J251, and connector J302 provides an oscillator output to the preselector mixer (V151) via connector J153.

## 4-14. INTERPOLATION OSCILLATOR V401.

*(See figure 4-43.)*

Interpolation oscillator V401 produces frequencies in the 580 kc to 680 kc range. These are applied to the injection IF amplifier and the synthesizer sections. The synthesizer receives its signal through the TUNING switch located on the crystal oscillator. V401 is triode connected and operates in a grid-tuned Armstrong circuit. Positive feedback is obtained through L401. Coil L402 is also part of the oscillator tank circuit but is not inductively coupled to the plate coil.

Two oscillator output connectors, J401 and J402, supply the oscillator signal to the injection IF and synthesizer sections, respectively. The signal level is reduced at the connectors by capacitors arranged to form a divider. Capacitors C410 and C411 reduce the signal level at connector J401 by a factor about 125 in direct ratio to the reactance of the two capacitors. Capacitors C413 and C414 reduce the signal level at connector J402 in a similar manner. Resistors R405 and R406 provide dc return paths for the external circuits connected at output connectors J401 and J402. The signal-reducing dividers also provide a degree of circuit isolation between the two output connectors.

## 4-15. FREQUENCY DIVIDER.

*(See figure 4-44.)*

This section produces frequency division from 100 kc to 20 kc. The 100 kc input signal is supplied by the frequency-dividing circuit in the crystal oscillator section, and the 20 kc output signal is applied to the synthesizer section for further division and other circuit applications.

Amplifier V451 receives its 100 kc input through connector J451 and coupling capacitor C451. It develops an output across the tuned plate circuit, consisting of L451 and C453.

The amplified 100 kc developed across the tuned plate circuit is coupled to the 20 kc divider stage through capacitor C457. Tubes V452 and V453 form a locked oscillator similar to those in the crystal oscillator frequency divider. The output circuit of L452, C460, and C461 is tuned to 20 kc by the series combination of C462 and C463. Capacitor C461 is an adjustment trimmer. The two series capacitors, C462 and C463, also form a signal dividing circuit. Output connector J455 is connected to this point and supplies a 20 kc signal for operation of the harmonic generator in the synthesizer circuit.

## 4-16. SYNTHESIZER.

*(See figure 4-45.)*

*a.* GENERAL.—The very high operating stability of the AN/WRR-2 can be attributed largely to the receiver's crystal-controlled, temperature-compensated master oscillator (par. 4-11). Frequency dividers, harmonic generators, and harmonic filters process the original locally generated signal to provide signals of frequencies related to submultiples of the master-oscillator frequency. These are picked off at stage outputs in the synthesizer section in the development of frequencies which:

(1) Contribute to the final IF conversion to 80 kc.

(2) Provide a fixed IF signal of 140 kc for use in continuous tuning.

(3) Furnish an 80 kc carrier signal to the LSB carrier amplifier (par. 4-10*d*).

(4) Trigger a blocking oscillator for the production of precise, 0.5 kc incremental pulses in conjunction with an interpolation oscillator of variable frequency in its 100 kc range.

As shown in the block diagram of figure 4-45, harmonic generator V801 in the synthesizer section receives from the frequency-divider section a 20 kc signal processed from the master-oscillator signal. Filter FL801 picks off the basic 20 kc signal, T802 the seventh harmonic (140 kc), and T803 the fourth harmonic (80 kc), and all three signals are passed on to associated circuits in the synthesizer and LSB detector-amplifier.

T803 applies its signal to a carrier amplifier stage in the LSB detector-amplifier. There the signal is amplified and directed to balanced-ring demodulators in the USB and LSB detector-amplifiers to serve as injected carriers for the demodulator circuits.

T802 supplies its 140 kc signal only when the receiver is set for continuous tuning by the CONT. position of TUNING switch S702.

FL801 passes the 20 kc signal through a pair of frequency-divider circuits (V802 and V803) with a 0.5 kc output. This signal excites pulse-shaping circuit V804 to trigger the next stage, blocking oscillator V805. This oscillator generates a harmonic spectrum in 0.5 kc incremental steps, making available output frequencies at least as high as the 820th harmonic.

To use this harmonic spectrum with the variable frequency output of interpolation oscillator V401 (see par. 4-14), a bandpass filter with a 100 kc bandwidth in the range of 720 kc to 820 kc (FL803, figure 4-48) is connected to the output of blocking oscillator V805.

When a particular harmonic of 0.5 kc in the above-mentioned 100 kc range combines in mixer stage V806 with a properly related signal from the interpolation oscillator, a difference frequency of 140 kc is produced in the output of the mixer stage. This 140 kc signal is amplified in V807 and passed on to IF amplifier V508 in the injection IF section (figure 4-15). Mixing the 140 kc with a 220 kc signal generated in the injection IF results in an 80 kc IF (final conversion), output from the injection IF section.

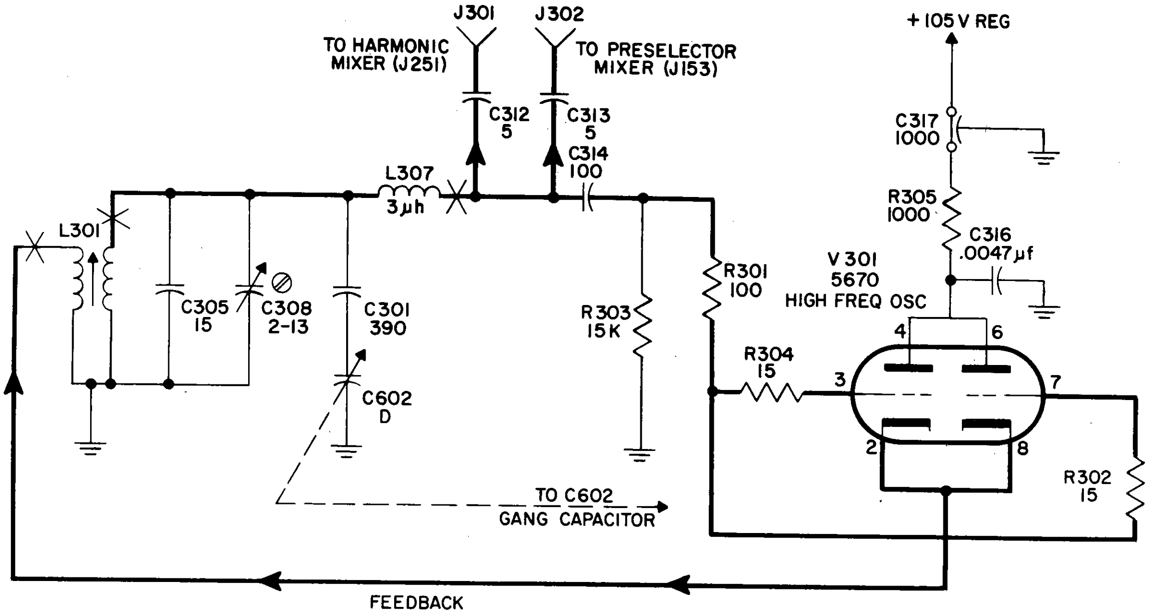

NOTE:
BAND SWITCH IN NO.1 POSITION
—✕— INDICATES SWITCH CONTACTS
OF S301-1 AND S301-2

*Figure 4-42. High-Frequency Oscillator, Simplified Schematic Diagram*

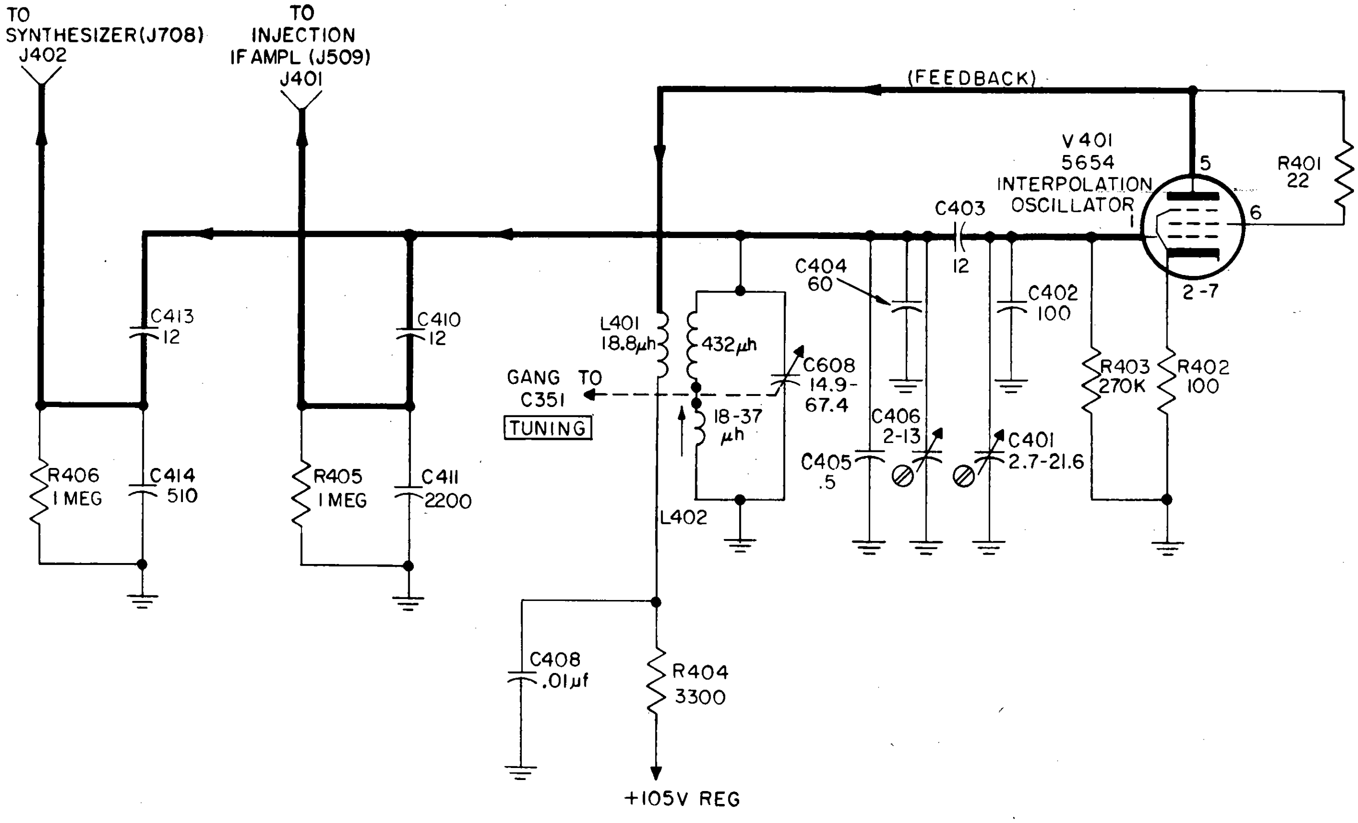

*Figure 4-43. Interpolation Oscillator, Simplified Schematic Diagram*

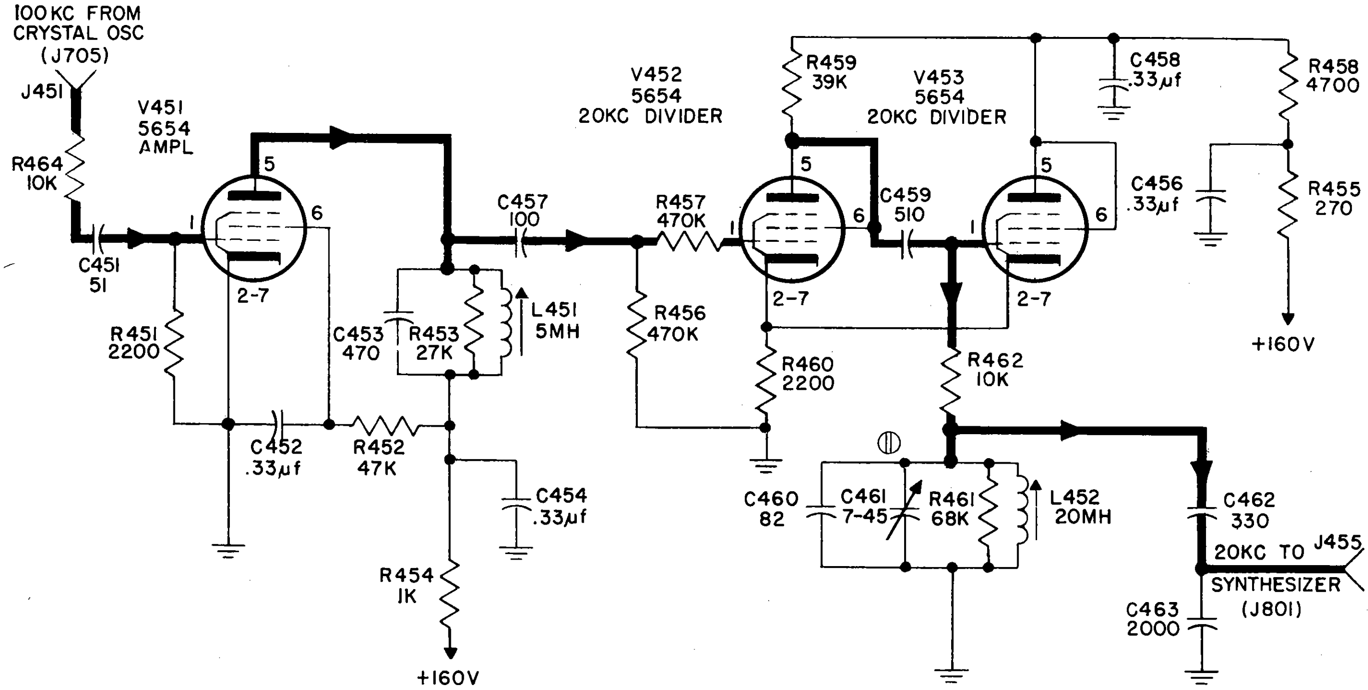

*Figure 4-44. Frequency Divider, Simplified Schematic Diagram*

*b.* HARMONIC GENERATOR V801.—Figure 4-46 is a schematic diagram of harmonic generator V801, the function of which is described in subparagraph *a.* V801 gets its 20 kc signal from the frequency dividers by way of connector J801 and capacitor C801.

*c.* DIVIDERS V802 and V803. *(See figure 4-47.)*—Frequency dividers V802 and V803 are locked oscillators which divide the 20 kc signal from the harmonic generator and filter FL801 by four (V802) and then by ten (V803) to 0.5 kc, which is applied to pulse shaper V804 for use as an accurately controlled trigger signal.

*d.* PULSE SHAPER V804, BLOCKING OSCILLATOR V805. *(See figure 4-48.)*—Triggered by pulse shaper V804, blocking oscillator V805 produces sharp pulses, ranging in 0.5 kc steps from a fundamental 0.5 kc to beyond its 820th harmonic. A portion (720 kc to 820 kc) of this spectrum provides harmonics to be mixed in the injection IF amplifier with signals from variable-output interpolation oscillator V401 to produce a difference frequency of 140 kc for use in the development of the final receiver IF of 80 kc.

The pulse shaper is a dual triode. The control grid

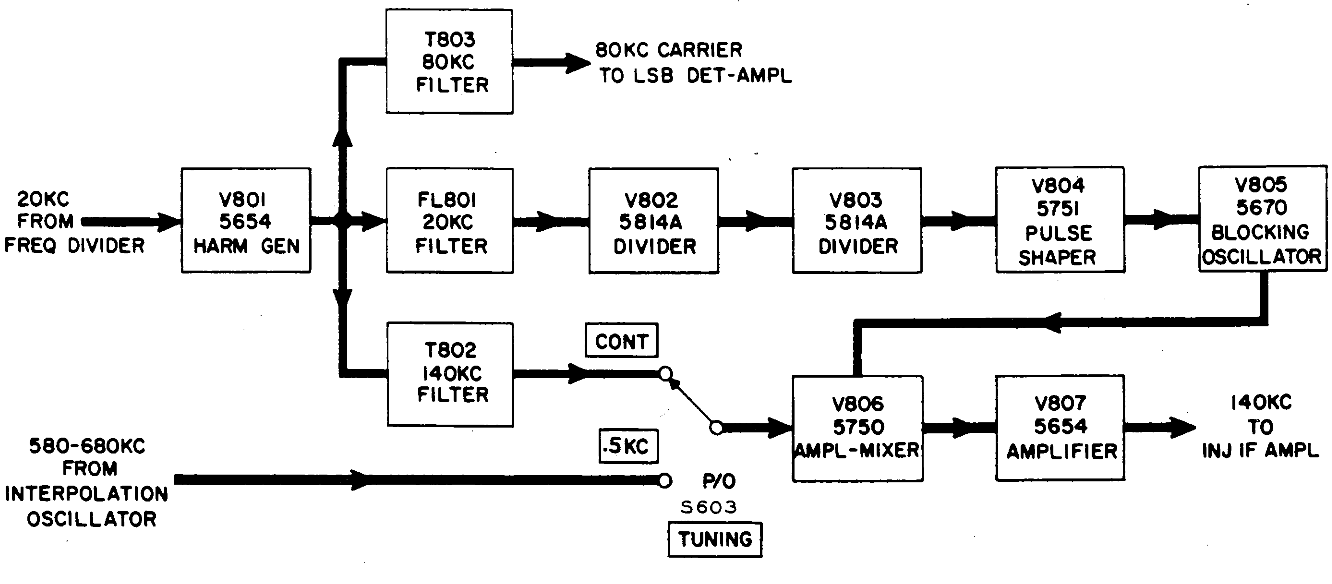

*Figure 4-45. Synthesizer, Block Diagram*

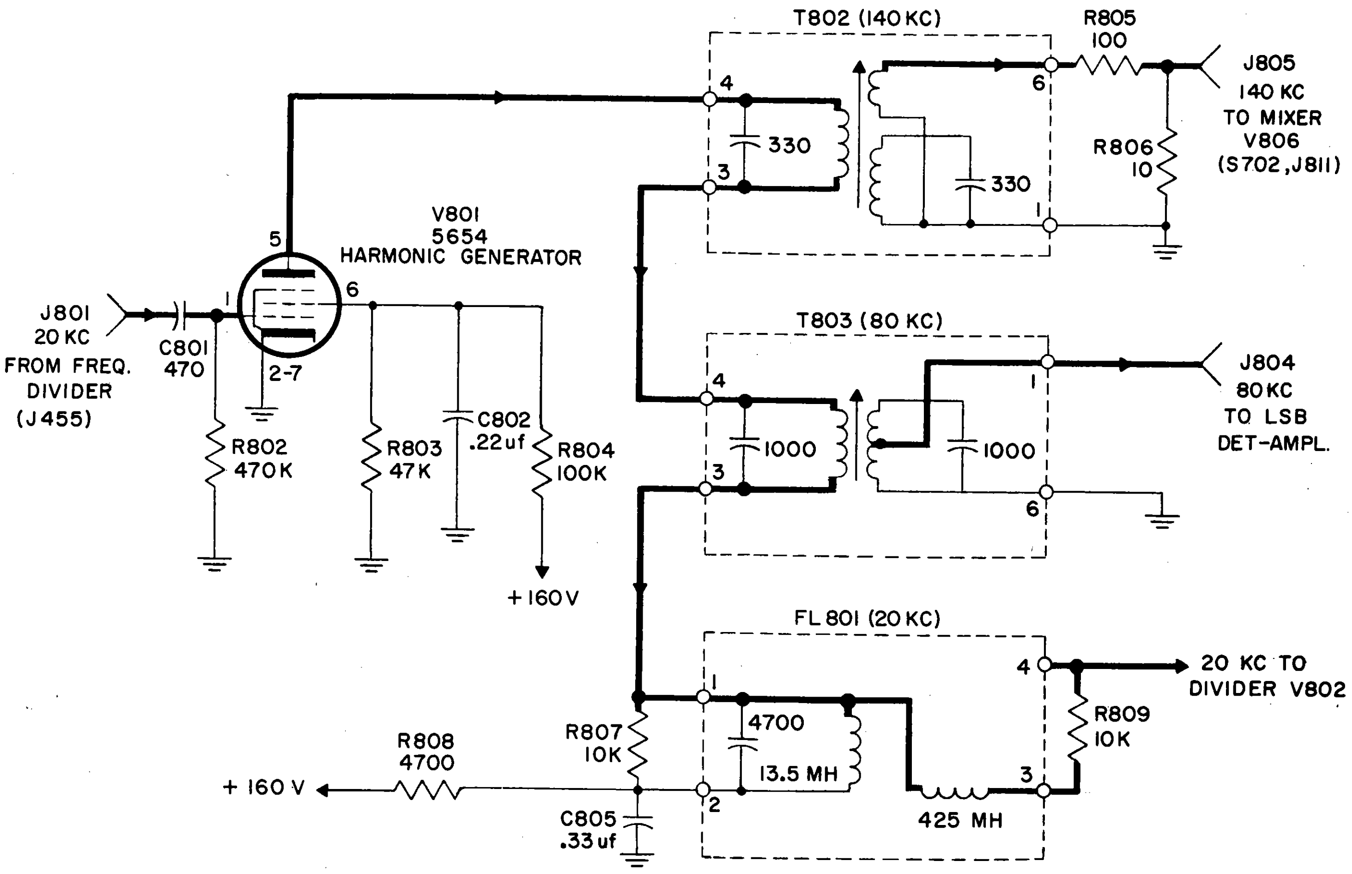

Figure 4-46. Harmonic Generator V801, Simplified Schematic Diagram

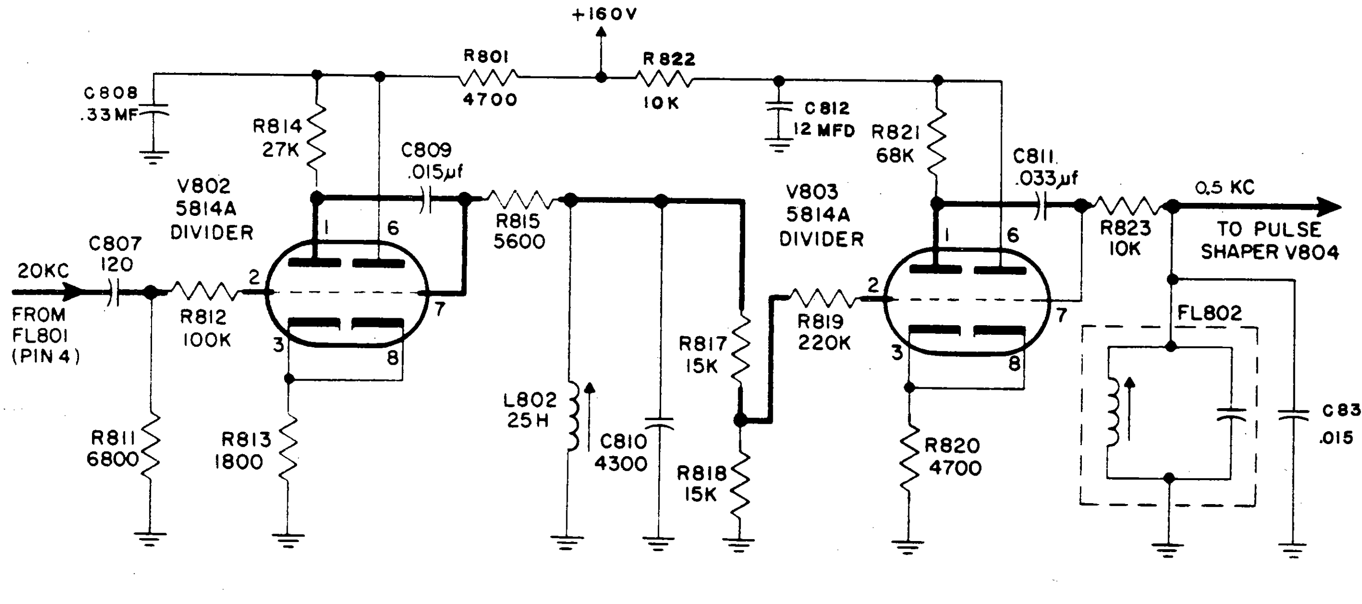

Figure 4-47. Dividers V802 and V803, Simplified Schematic Diagram

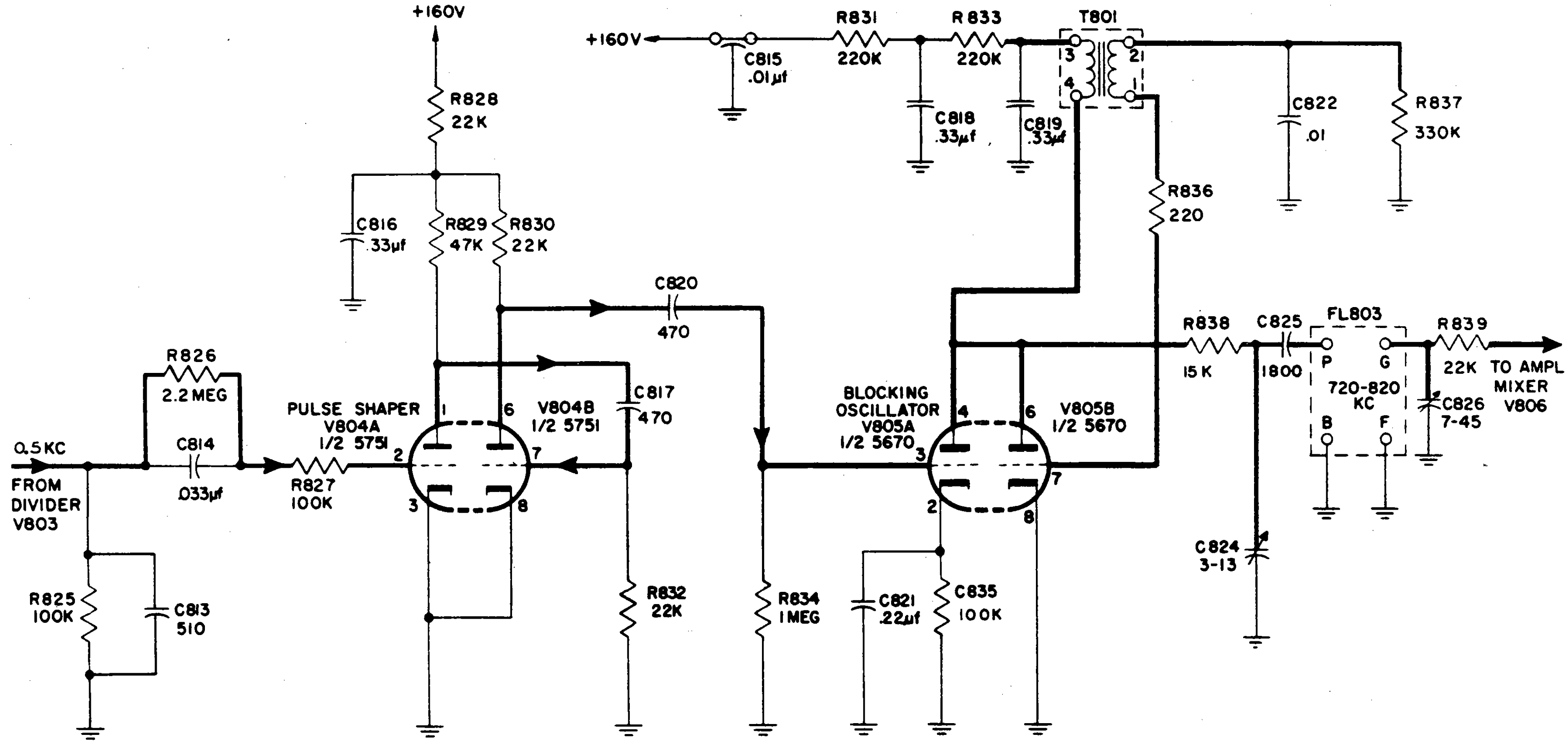

*Figure 4-48. Pulse Shaper V804 and Blocking Oscillator V805, Simplified Schematic Diagram*

(pin 2) of V804A receives from the frequency divider a 0.5 kc signal, the positive half-cycle of which is clipped by grid limiting, the negative half-cycle by the tube being driven into cutoff. The 0.5 kc output of V804A is a square wave developed across plate load resistor R829 and coupled to the control grid of V804B through differentiating network C817 and R832. This changes the square wave to narrow positive- and negative-going spikes which correspond to the leading and trailing edges of the square wave. These spikes are amplified and inverted by V804B. The positive spikes developed across resistor R830 and coupled to blocking oscillator V805 provide a 0.5 kc sync pulse, which locks V805 in by occurring at a time slightly earlier than the free-running frequency of V805.

V805 is a dual-triode tube one half of which (V805A) acts as a triggering tube for blocking oscillator V805B, which operates as follows:

If capacitor C822 is charged negatively and V805B cut off, the former will discharge through resistor R837, reducing the bias on V805B until it begins to conduct. The decrease in plate voltage is reflected into the grid circuit through T801 as an increase in positive voltage at the grid. With the grid more positive, plate current again increases, and the cycle of decrease in plate voltage continues until tube saturation is reached. With no further increase in the field of plate winding T801 and no transfer of positive voltage to the grid, capacitor C822 again discharges through R837, but only from its positively polarized state, causing the grid to become less positive. Plate current decreases and plate voltage increases, causing a negative voltage to be induced in the grid winding and on the tube's grid. This causes further change in the same direction until V805B is cut off again and the cycle is complete. The pulse width is determined by time constant C822-R-837, and the rise and decay of the output is determined by the characteristics of pulse transformer T801.

The output of V805B is applied through bandpass filter FL803 to amplifier-mixer V806 to combine with another input signal from the interpolation oscillator or from T802 (see figure 4-45).

*e.* AMPLIFIER-MIXER V806, AMPLIFIER V807. *(See figure 4-49.)*—Amplifier-mixer V806 produces a 140 kc signal for later use in establishing the final conversion signal of 80 kc.

One of the inputs (grid 3, pin 7) to V806 is the 0.5 kc harmonic in the range of 720 kc to 820 kc from blocking oscillator V805. During incremental tuning, the other input (grid 1, pin 1) is a signal in the range of 580 kc to 680 kc from interpolation oscillator V401. The difference frequency is 140 kc, applied to bandpass filter FL804. During continuous tuning, the 140 kc is picked off directly from filter T802 and passed to FL804. At the same CONT. setting of TUNING switch S603, plate voltage is removed from blocking oscillator V805B, so that the only signal now applied to V806 is the 140 kc signal from T802. The 140 kc signal is fed to IF amplifier stage V807, the output of which connects through jack J815 to the injection IF amplifier section (figure 4-15), the input jack of which is J511.

### 4-17. CONVERTER POWER SUPPLY.

*(See figure 4-50.)*

The receiver has two power supplies, converter and demodulator. The converter power supply serves all circuits except those of the three detector-amplifiers, upper- and lower-sideband and AM. Voltage- and current-stabilizing circuits are incorporated in the converter power supply to ensure steady inputs for voltage-sensitive components, in accordance with stability requirements.

Input transformer T901 has a primary tapped for use with ac inputs of 105, 115, and 125 volts. The secondary windings provide high voltages for rectifier operation and low voltages for filaments. Terminals 5 and 6 are

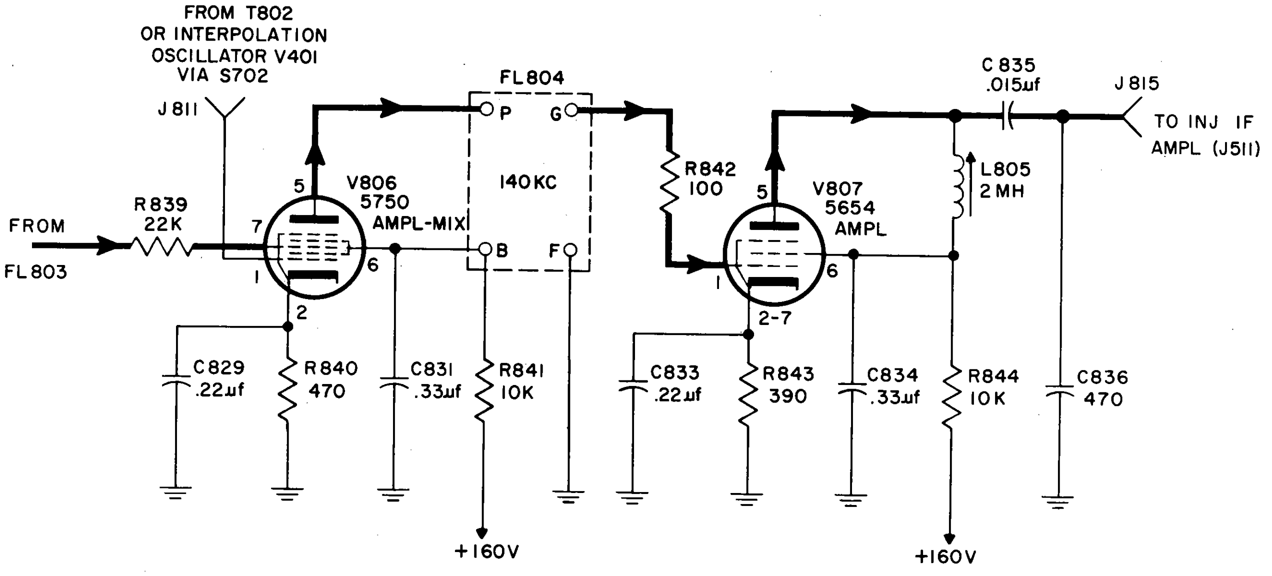

*Figure 4-49. Amplifier-Mixer V806 and Amplifier V807, Simplified Schematic Diagram*

the high-voltage secondary connections for full-wave bridge rectifier CR901-CR902-CR903-CR904. The output of the rectifier goes to a filter consisting of choke L901 and dual capacitor C901. This filter is supplemented by a resistor-capacitor section consisting of resistor R904 and dual capacitor C902. Besides providing added filtering, the supplementary section makes available pick-off points for output voltages of various magnitudes and degrees of filtering. Voltage stabilization is provided by regulator tubes V902 and V903 and limiting resistors R902 and R903. These voltages are available at terminals 6 and 4 of TB605.

Filament voltage for HF oscillator V301 is supplied by an individual secondary winding, terminals 14 and 15, and stabilized by CR905 and CR906. CR905 and CR906 along with R901 and R905 form a voltage regulator to provide a constant 6.8 volts to the filament of V301.

Two other low-voltage windings are conventional, supplying 6.15 volts and 6.3 volts at secondary terminals 7 to 10 and 11 to 13 as shown in figure 4-50.

## 4-18. DEMODULATOR POWER SUPPLY.

*(See figure 4-51.)*

Operation of the demodulator power supply is similar to that of the unregulated portion of the converter power supply (par. 4-17). The demodulator power supply uses a conventional bridge-type rectifier (CR1201, CR1202, CR1203, and CR1204) connected to a choke input filter (L1201). Additional resistor-capacitor filter sections are provided for the various B+ output lines. Functional sections of the demodulator get their filament voltage from a 6.3 vac winding (pins 7 and 9) of power transformer T1201.

## 4-19. BLISTERS.

*(See figure 4-52.)*

Connectors for external cabling and interdrawer lines between the demodulator and converter are mounted on two nonconducting strips, called blisters, one each on the converter and demodulator. Figure 4-53 shows all input lines which pass through the blisters. The demodulator blister contains also filters FL1801 through FL1803. The first two are low-pass filters used in the output lines of the detector-amplifier sections; FL1803 is a radio-frequency filter used in the primary ac power line.

## 4-20. DRIFT-CANCELLING LOOPS.

*(See figure 4-53.)*

*a.* GENERAL.—Circuit loops ensure the operating stability of the receiver by nullifying the effects of drift in the high-frequency oscillator (V301) and the interpolation oscillator (V401). Figure 4-53 is a block diagram showing the relationship of the two loops.

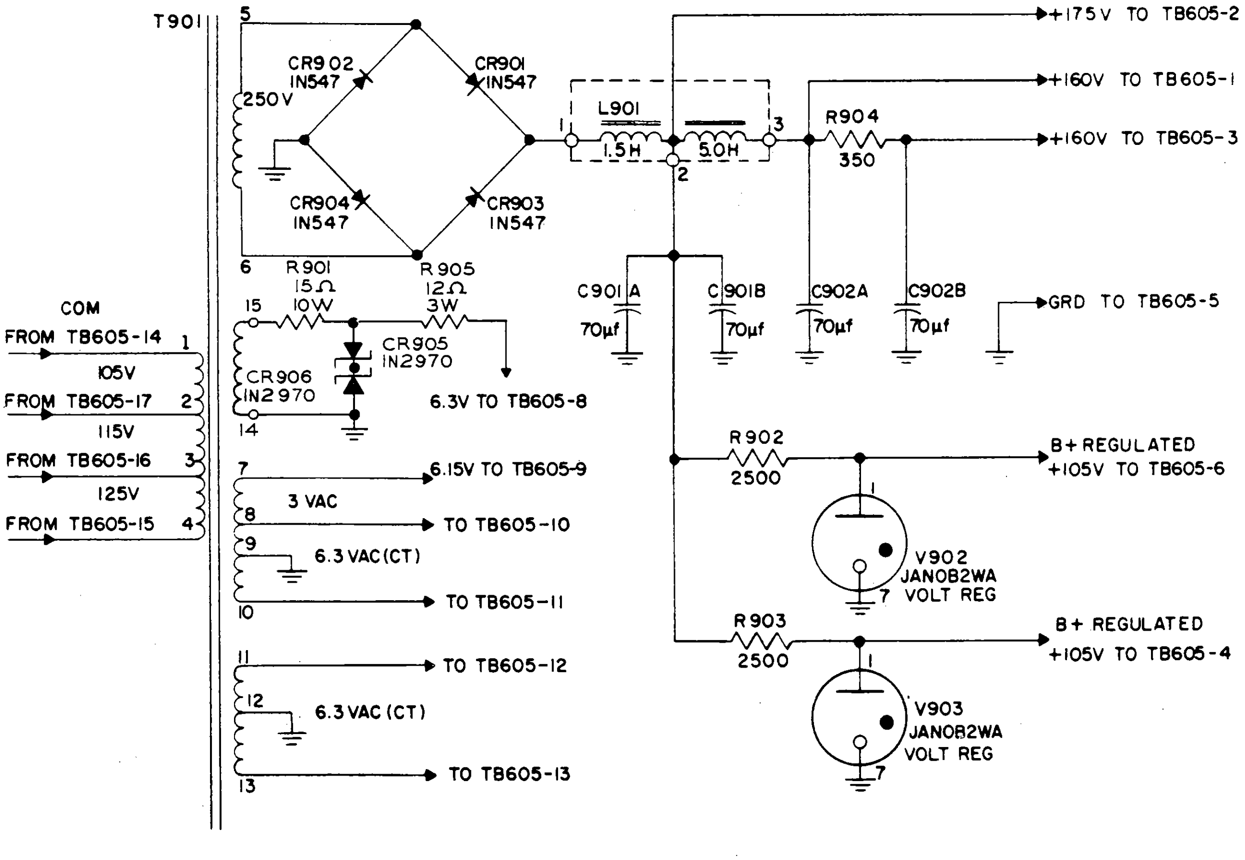

*Figure 4-50. Converter Power Supply, Simplified Schematic Diagram*

*b.* HIGH-FREQUENCY OSCILLATOR. *(See figure 4-54.)*—Initial frequency conversion takes place in mixer stage V151 by the combining of signals from the preselector (F1) and HF oscillator V301 (F3) to produce a difference frequency of F3 minus F1. This signal is passed through the tunable IF section and IF amplifier stage V501 to mixer stage V502 for a second conversion. Without drift compensation, the latter mixer stage would ordinarily receive another signal from a second local oscillator to establish the desired second conversion frequency. This procedure, while effecting the desired conversion, in no way compensates for variations in the frequencies of the local oscillators involved, the result being corresponding variations in the difference frequency of the converted signals. To counteract this effect, the output of HF oscillator V301 (F3), besides combining with the incoming signal (F1) in mixer stage V151, mixes with a second signal originating in a crystal-controlled oscillator. This second signal is modified by frequency dividers, harmonic generator, and harmonic amplifiers to bring it to the proper frequency (F2) to mix with the HF oscillator signal and produce a difference frequency F3-F2, which, in turn, is fed through injection amplifiers V504 and V505 to mixer stage V506, where it combines with a signal from low-frequency interpolation oscillator V401 (F4). Mixing in this stage provides an output signal through injection frequency amplifier V507 which, when combined in V502 with the output from V501, results in the second frequency conversion.

Figure 4-54 indicates symbolically the frequency differences relative to signal inputs to the various mixer stages. By means of the loop arrangement, of which the HF oscillator (V301) is a part, any variation in its frequency output is transmitted equally and in the same sense to the two legs of the loop. Therefore, the difference frequency produced in common mixer stage V502 (by mixing of the signals from the legs of the loop) does not contain HF oscillator component F3. Elimination of F3 from the output of V502 is equivalent to nullification of the effect of drift that could be caused by the presence of this signal.

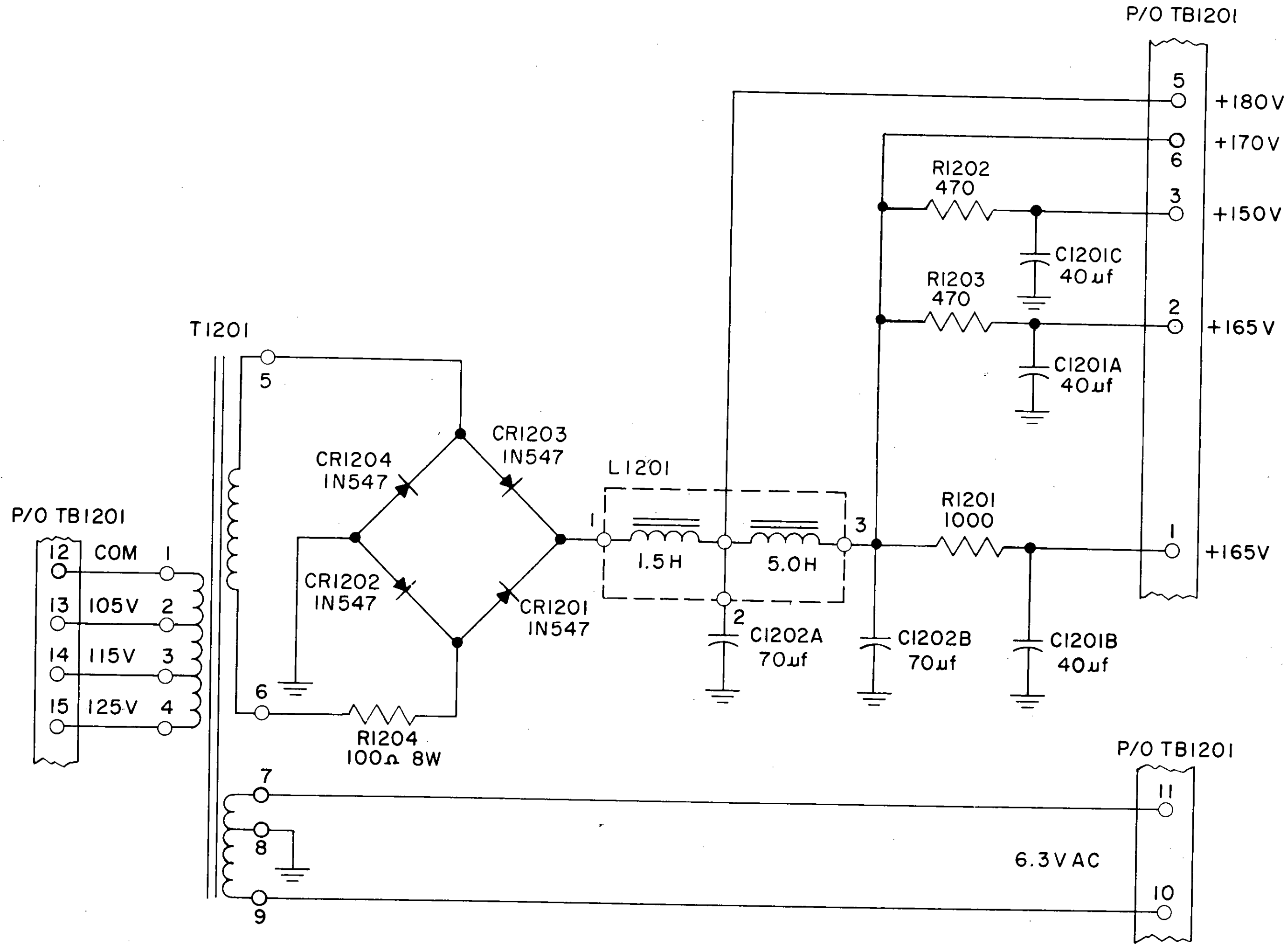

*Figure 4-51. Demodulator Power Supply, Simplified Schematic Diagram*

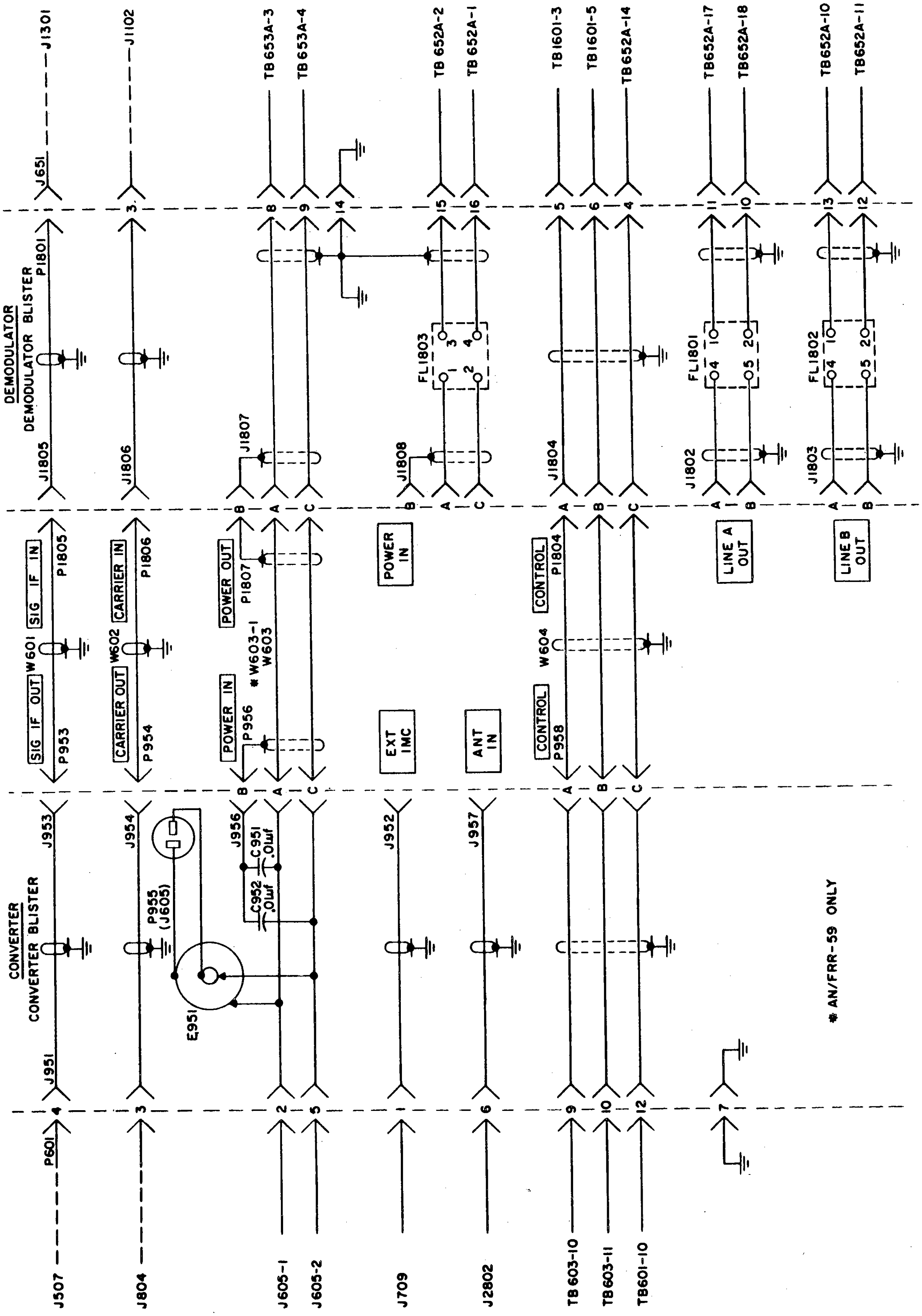

Figure 4-52. Converter-Demodulator Interconnections

**Note**

So far as drift-cancellation is concerned, mixer stage V251, if made to operate at an output frequency consistent with the requirement of mixer stage V502 to produce the second frequency conversion, would have sufficed to close the drift-cancellation loop. The increased complexity of the actual loop circuit is based on another requirement related to variable tuning.

Interpolation oscillator V401 provides variable frequency signal injection for mixer V506. This allows the frequency of the V506 output signal to be varied in accordance with variations in IF stage V501, so that the difference between them always equals the constant second frequency conversion (220 kc). Any frequency drift in this oscillator is a detriment to receiver stability. To neutralize the effect of drift, a second loop, of which V401 is a part, is established to eliminate interpolation oscillator output frequency F4 from the output of the third frequency conversion stage. Since component F4 is not in the succeeding stages, the drift effect has been voided.

*c.* INTERPOLATION OSCILLATOR. *(See figure 4-55.)*—The drift-canceling loop for the interpolation oscillator parallels that of the HF oscillator except that interpolation oscillator signal F4 is mixed with an incoming signal, F3 minus F2. The incoming and oscillator signals add in mixer stage V506. The sum frequency signal goes to mixer stage V502 via injection amplifier V507 and mixes with incoming signal F3 minus F1 to produce the second conversion signal. The latter is fed to mixer stage V503 via IF filter FL502 for a third conversion.

Interpolation oscillator signal F4 also combines in mixer V806 with signal F5, which originates in the crystal oscillator and becomes modified in the frequency divider and synthesizer sections. The output of mixer stage V806 goes to mixer V503 via injection amplifier V508, where it serves as the other signal needed by V503 to make the third frequency conversion.

Figure 4-55 shows the frequency transfers involved in the various stages of the loop. Because of the loop, of which the interpolation oscillator is a part, any variation in oscillator output frequency from any cause is relayed to both legs of the loop. Since each leg receives the same frequency variation, the result of mixing the signals of each leg in the same mixer stage (V503) is an output signal free of frequency component F4. For example, if the incoming signal frequency to mixer V506 is 825 kc and the interpolation oscillator signal frequency is 630 kc, the two signals total 1455 kc. This signal combines with the 1675 kc signal from V501 to provide a 220 kc signal at the output of mixer V502, then to be applied to mixer V503.

On the other leg of the loop, the interpolation oscillator output of 630 kc mixes with the 770 kc signal from the synthesizer section. The difference frequency of 140 kc is applied to mixer V503, and this stage presents an 80 kc IF signal in its output.

If the interpolation oscillator has no drift, the final output from mixer stage V503 is just as described above. If, however, the oscillator output increases by 100 cps, the frequencies available for mixing at mixer stage V503 are now 219.9 kc and 139.9 kc. Since the change in frequency at the interpolation oscillator has been transferred to both legs of the loop by the same amount (100 cps) and in the same sense at the inputs of V503, the output of mixer V503 remains 80 kc.

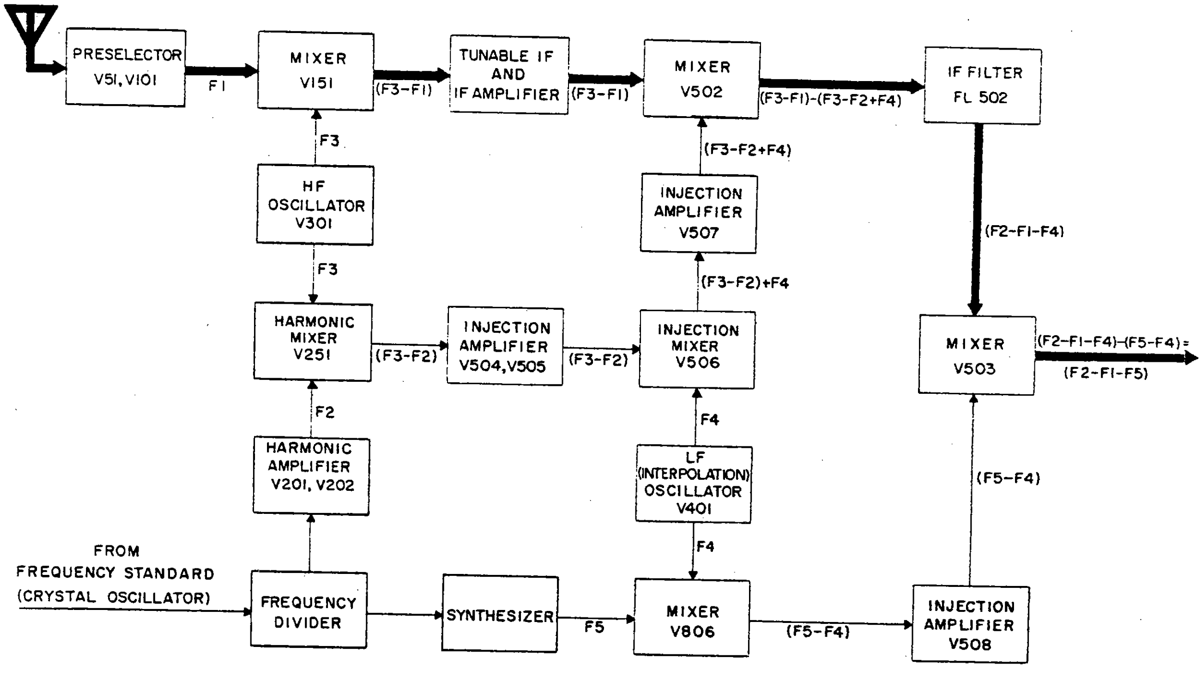

*Figure 4-53. Receiver Drift Cancellation, Block Diagram*

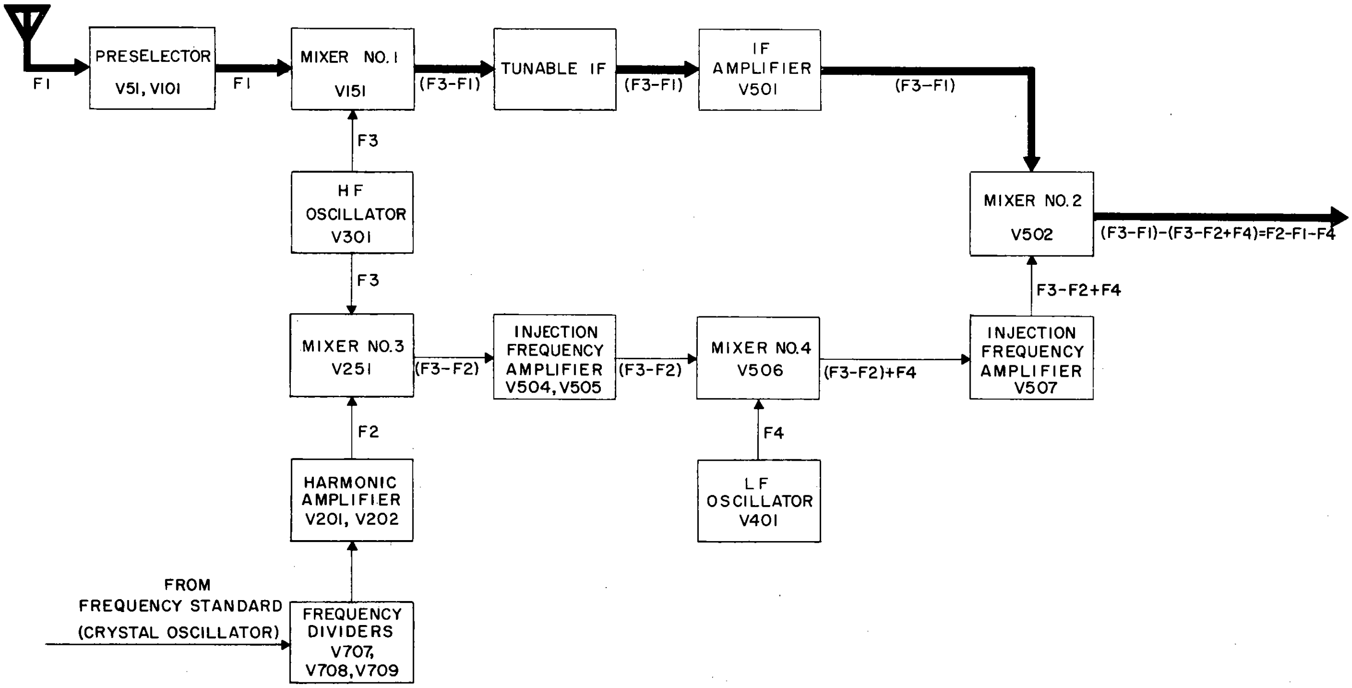

*Figure 4-54. High Frequency Oscillator Drift Cancellation, Block Diagram*

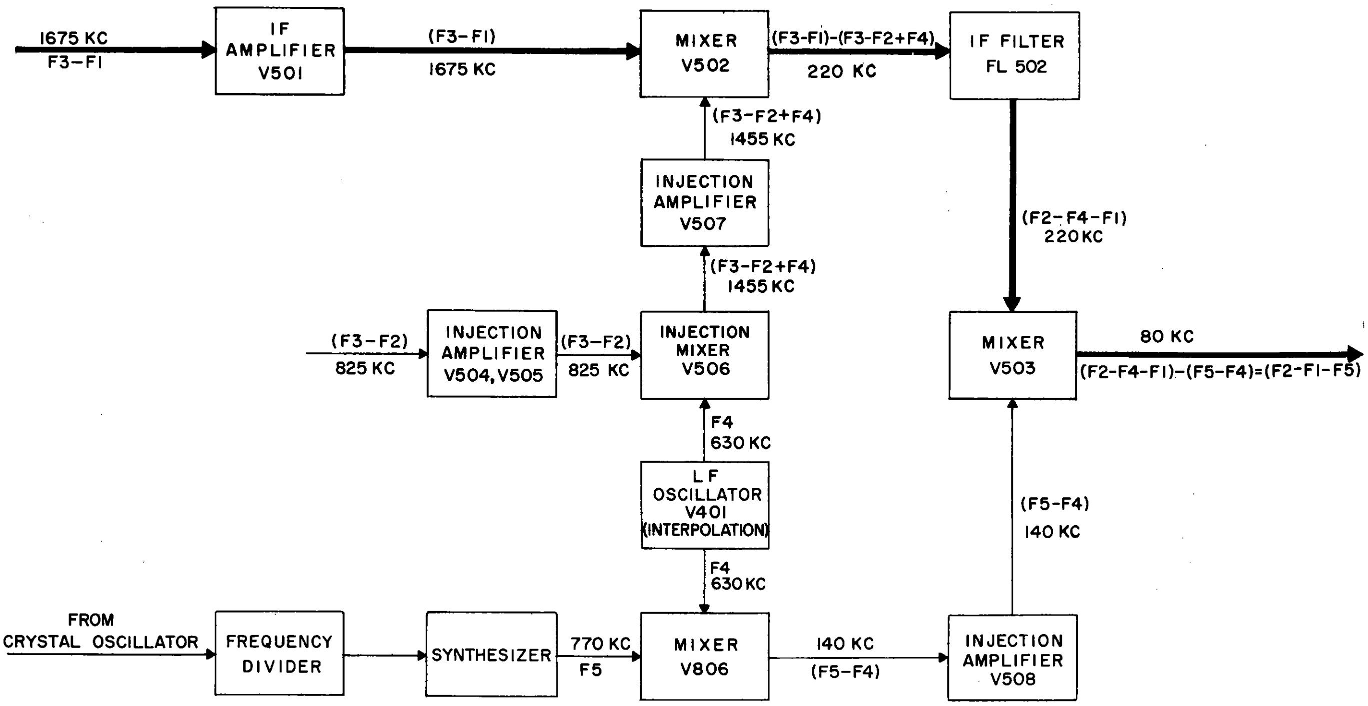

*Figure 4-55. Interpolation Oscillator Drift Cancellation, Block Diagram*

# SECTION 5

# TROUBLE-SHOOTING

## 5-1. GENERAL.

Effective trouble-shooting of electronic equipment consists of locating the circuit at fault and identifying the defective component, followed by repair and adjustments to return the equipment to normal operating condition. A systematic procedure is required.

The first step is a visual inspection of the complete equipment, with special attention given to easily overlooked troubles, such as incorrectly positioned controls, blown fuses, or bad connections. A logical method of trouble-shooting follows.

Signal tracing is especially effective in trouble-shooting. With this method, the absence or abnormality of the received signal at a particular point or circuit section indicates the circuit at fault and eliminates properly operating circuits as the source of trouble. In general, for radio receiving equipment that is operable but deficient in some respect, signal tracing begins at the antenna input circuit and is carried through the various stages toward the output circuits. When the equipment is not operable, the tracing direction is reversed, from the output of the receiver back toward the antenna input circuit.

If a preliminary inspection of the receiver does not reveal the trouble, it may be possible to relate the fault to one of the two drawers by noting abnormal panel meter indications or changes in control adjustments. Eliminating one drawer as a source of trouble permits concentration on the other. Trouble-shooting the overall equipment will include the following steps:

TABLE 5-1. RADIO RECEIVING SETS AN/WRR-2A AND AN/FRR-59A, REFERENCE NUMBERS AND SUBASSEMBLY LOCATIONS

| REFERENCE NUMBERS | SUBASSEMBLY | SUBASSEMBLY LOCATION |
|---|---|---|
| 51 — 99 | Preselector, first RF | Converter drawer, lower deck |
| 101 — 149 | Preselector, second RF | Converter drawer, lower deck |
| 151 — 199 | Preselector mixer | Converter drawer, lower deck |
| 201 — 249 | Harmonic amplifier | Converter drawer, lower deck |
| 251 — 299 | Harmonic mixer | Converter drawer, lower deck |
| 301 — 349 | HF oscillator | Converter drawer, lower deck |
| 401 — 449 | Tunable IF filter | Converter drawer, lower deck |
| 501 — 599 | Injection IF amplifier | Converter drawer, lower deck |
| 601 — 649 | Converter panel | Converter drawer, control panel |
| 651 — 699 | Demodulator panel | Demodulator drawer, control panel |
| 701 — 799 | Crystal oscillator | Converter drawer, upper deck |
| 801 — 899 | Synthesizer | Converter drawer, upper deck |
| 901 — 949 | Converter power supply | Converter drawer, upper deck |
| 951 — 999 | Converter blister | Bottom of enclosure at rear |
| 1001 — 1099 | USB detector-amplifier | Demodulator drawer, lower deck |
| 1101 — 1199 | LSB detector-amplifier | Demodulator drawer, lower deck |
| 1201 — 1299 | Demodulator power supply | Demodulator drawer, lower deck |
| 1301 — 1399 | 80 kc filter unit | Demodulator drawer, lower deck |
| 1601 — 1799 | AM detector-amplifier | Demodulator drawer, upper deck |
| 1801 — 1899 | Demodulator blister | Top of enclosure at rear |
| 2801 — 2849 | Antenna coupler | Converter drawer, lower deck |

NOTE: The abbreviations USB, LSB, and AM refer to the upper, lower, and double sideband detector-amplifiers, respectively.

*a.* Determining the major unit at fault

*b.* Localizing the trouble to a subassembly (functional section) of the major unit

*c.* Trouble-shooting the subassembly to determine the defective circuit

*d.* Removing the subassembly for repairs

*e.* Replacing the subassembly

*f.* Checking the equipment to verify that the fault has been corrected.

## 5-2. TEST EQUIPMENT AND SPECIAL TOOLS.

*a.* TEST EQUIPMENT.—No special tools are required for trouble-shooting the receiver. A list of the required test equipment is given below. Equivalent test equipment may be substituted.

(1) Converter Patch Cable W624 (supplied with equipment)

(2) Multimeter AN/PSM-4C

(3) Signal Generator AN/URM-25D (2 required)

(4) Vacuum Tube Voltmeter AN/USM-143

(5) Vacuum Tube Voltmeter ME-6E/U

(6) Audio Oscillator AN/URM-127

(7) Oscilloscope OS-8E/U

(8) Vacuum Tube Voltmeter AN/USM-116.

*b.* TEST CABLES.— A patch cable (W624) is provided for operating the converter drawer when it is extended. The demodulator drawer will operate extended without extra cabling. When the patch cable is used, the receiver will operate with both drawers extended,

TABLE 5-2. RADIO RECEIVING SETS AN/WRR-2A AND AN/FRR-59A, PRELIMINARY CONTROL SETTINGS

| CONTROL | LOCATION | SETTING |
|---|---|---|
| POWER ON/OFF | Lower demodulator panel | OFF |
| RECEPTION A.M./S.S.B. | Lower demodulator panel | A.M. |
| O.L. THRES. | Upper demodulator panel | OFF |
| A.M.-A.G.C. TIME CONST. | Upper demodulator panel | OFF |
| A.M. A.F. LEVEL | Upper demodulator panel | 0 |
| R.F. SELECTIVITY B.W.-KCS. | Upper demodulator panel | 12.0 |
| B.F.O. | Upper demodulator panel | OFF |
| VAR. B.F.O. | Upper demodulator panel | 0 |
| SILENCER | Upper demodulator panel | OFF |
| PHONE LEVEL | Lower demodulator panel | 0 |
| A.F. LEVEL LINE A | Lower demodulator panel | 0 |
| A.G.C. UPPER ON/OFF/S.S.B. | Lower demodulator panel | OFF |
| A.G.C. UPPER SLOW/FAST | Lower demodulator panel | FAST |
| A.F. LEVEL LINE B | Lower demodulator panel | 0 |
| A.G.C. LOWER ON/OFF/S.S.B. | Lower demodulator panel | OFF |
| A.G.C. LOWER SLOW/FAST | Lower demodulator panel | FAST |
| INT. STD. PHASE/TEMP. | Upper converter panel | TEMP. |
| INTERNAL STANDARD ADJUSTMENT | Upper converter panel | (DO NOT ADJUST) |
| FREQ. STANDARD EXT./INT. | Upper converter panel | INT. STD. |
| TUNING (.5 KC/CONT.) | Upper converter panel | .5 KC. |
| TUNING $\Delta F = 100$ KC (MC) | Lower converter panel | 02.0 |
| H.F. ADJ. | Lower converter panel | Center |
| BAND | Lower converter panel | 2-4 |
| TUNING (KC) | Lower converter panel | 00.0 |
| R.F. GAIN | Lower converter panel | 0 |
| ANT. COMP. | Lower converter panel | 0 |
| ANT. CPLG. | Lower converter panel | NOR. |

and test measurements may be made at each subassembly through the use of the drawer-tilting mechanisms.

*c.* SUBASSEMBLY SYMBOL NUMBERS.— Symbol reference designations for all parts in a particular subassembly are grouped numerically for that subassembly. The series of number groups assigned to the subassemblies in the receiver are given in table 5-1.

## 5-3. OVER-ALL TROUBLE-SHOOTING.

*a.* PRELIMINARY CHECK.— Before following the detailed trouble-shooting procedure provided for each subassembly, check the panel controls for proper setting; inspect the equipment for blown fuses and faulty antenna or headphone connections; and look for indications of damage, such as broken wires or charred insulation. Refer to the check-off procedures given in NAVSHIPS 91828, particularly paragraph 3-3, "Testing Techniques and Practices."

*b.* CONTROL SETTINGS.— A list of panel control settings is given in table 5-2. These preliminary settings are in preparation for trouble-shooting the receiver. Readjust individual controls as required when trouble-shooting specific sections of the equipment.

*c.* SYSTEM TROUBLE-SHOOTING CHART.— Table 5-3, the system trouble-shooting chart, describes a step procedure for localizing the trouble to either the converter or the demodulator drawer. By a process of elimination, the particular subassembly or circuit section at fault may be determined.

## 5-4. FUNCTIONAL TROUBLE-SHOOTING.

*a.* GENERAL.— The paragraphs which follow in this section provide individual instructions for trouble-shooting each subassembly of the receiver. Included are trouble-shooting charts, functional schematic diagrams, photographs showing the location of parts and test points, and tables of voltage and resistance measurements.

*b.* TEST POINT SYMBOLS.— For the purpose of rapid identification of circuit test points, symbols are provided in trouble-shooting tables and schematic diagrams throughout the manual. They have the following significance:

☆1 Indicates a major test point for checking circuit function and localizing trouble or a major measuring point for signal or power-supply voltages.

(1A) Indicates a secondary test point for isolating faults within a major section and to indicate adjustments. The numeral relates to a major point.

(1A1) Indicates a minor test point within a secondary section. The first numeral relates to a major point, the letter to a secondary point.

## WARNING

Potentials as high as 210 volts rms are present in the power-supply circuits. Avoid contact when checking any of the subassemblies.

### TABLE 5-3. RADIO RECEIVING SETS AN/WRR-2A AND AN/FRR-59A, SYSTEM TROUBLE-SHOOTING CHART

| STEP | ACTION | NORMAL INDICATION | PROBABLE FAULT LOCATION |
|---|---|---|---|
| 1 | Throw POWER switch ON. Wait 30 seconds. Tune receiver to 02.0 mc. | MEGACYCLE and KILOCYCLE counters light. | Fuse F601. |
| 2 | Adjust TUNING ΔF = 100 KC for dip on 100 KC TUNING meter. | 100 KC TUNING meter shows dip at 02.0 on MEGACYCLE counter. | Meter or switch; if not, refer to par. 5-11, Injection IF Amplifier. |
| 3 | Adjust TUNING (ΔF = 0.5 KC) for dip on .5 KC TUNING meter. | .5 KC TUNING meter shows dip at 00.0 on KILOCYCLE counter. | Meter or switch; if not, refer to par. 5-11. |
| 4 | Adjust TUNING ΔF = 100 KC and TUNING (ΔF = 0.5 KC) for reception of a local AM signal. Place TUNING .5 KC/CONT. switch in CONT. position if necessary. | Maximum reading on the RESONANCE meter. | Refer to par. 5-8, 5-9, 5-13, and 5-15. |
| 5 | Turn the A.M. A.F. LEVEL control clockwise. | LINE A OUTPUT meter indicates the level, and a signal is heard in the speaker. | Demodulator unit; see par. 5-13. |
| 6 | Place RECEPTION switch in the S.S.B. position and turn the A.F. LEVEL LINE A control clockwise. | LINE A OUTPUT meter indicates the level, and a signal is heard in the speaker but is distorted and requires adjustment of the TUNING (△F = 1 KC) control to remove the distortion. | USB section; see par. 5-17. |
| 7 | Place the A.F. LEVEL LINE A control at 0 and turn the AF LEVEL LINE B control clockwise. | LINE B OUTPUT meter indicates the level, and the signal in the speaker is similar to that in step 6. | LSB section; see par. 5-21. |

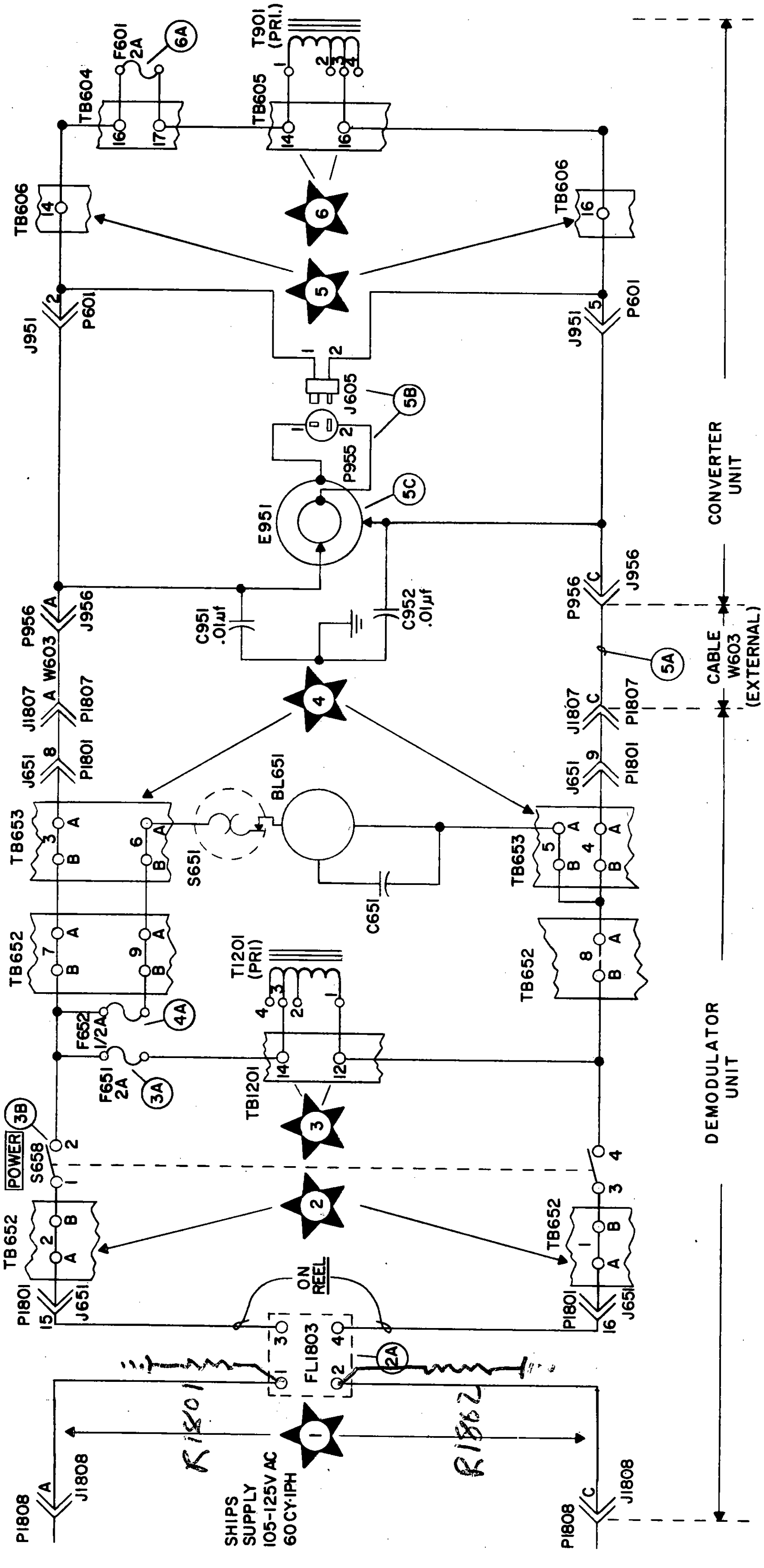

*Figure 5–1. Radio Receiving Sets AN/WRR-2A & AN/FRR-59A Power-Distribution Diagram*

## 5-5. PRIMARY POWER SECTION.

*a.* GENERAL.— Figure 5-1 is a power-distribution diagram of the receiver. When tracing the power circuits, make certain that the main power is being supplied.

*b.* TEST EQUIPMENT AND SPECIAL TOOLS.— Use a Multimeter AN/PSM-4B or equivalent in trouble-shooting the primary power circuits. No special tools are required.

*c.* CONTROL SETTINGS.— Set the panel controls as described in table 5-2.

*d.* PRIMARY POWER TROUBLE-SHOOTING CHART.— Table 5-4 is a trouble-shooting chart for the primary power section. Perform the steps in the order shown. Compare the results with those listed in the NORMAL INDICATION column. If an indication is normal, proceed to the next step; if abnormal, follow the instructions given in the NEXT STEP column. To

### TABLE 5-4. RADIO RECEIVING SETS AN/WRR-2A AND AN/FRR-59A, PRIMARY POWER TROUBLE-SHOOTING CHART

| STEP | TEST POINT | PRELIMINARY ACTION | NORMAL INDICATION | NEXT STEP |
|---|---|---|---|---|
| 1 | 1<br>Figs.<br>5-1<br>5-80<br>5-81 | Place POWER switch S658 in ON position. | MEGACYCLE and KILOCYCLE counters light. Axial fan BL651 may or may not operate.[1] | If the counters do not light, check fuse F601. |
| 2 | 2<br>Figs.<br>5-1<br>5-80<br>5-81 | Connect multimeter between terminals 1 and 2 of TB652. | 105 to 125 vac | If normal readings are not obtained, refer to par. 5-23, Demodulator Blister. |
| 3 | 3<br>3A<br>3B<br>Figs.<br>5-1<br>5-5<br>5-6 | Connect multimeter between terminals 12 and 14 of TB1201. | 105 to 125 vac | If normal readings are not obtained, check fuse F651. If fuse F651 is good, check POWER switch S658. |
| 4 | 4<br>4A<br>Figs.<br>5-1<br>5-80<br>5-81 | Connect multimeter between terminals 5 and 6 of TB653. | 105 to 125 vac | If normal reading is not obtained, check fuse F652. If fuse is good and the axial fan is not operating, refer to par. 6-5*d*(3), Axial Fan Maintenance.[1] |

### TABLE 5-4. RADIO RECEIVING SETS AN/WRR-2A AND AN/FRR-59A, PRIMARY POWER TROUBLE-SHOOTING CHART (cont)

| STEP | TEST POINT | PRELIMINARY ACTION | NORMAL INDICATION | NEXT STEP |
|---|---|---|---|---|
| 5 | ☆5<br>5A<br>5B<br>5C<br>Figs.<br>5-1<br>5-77<br>5-78 | Connect multimeter between terminals 14 and 16 of TB606. | 105 to 125 vac | If normal reading is not obtained, check cable W603[2] and reel E951.<br>Also check P955 and J605. |
| 6 | ☆6<br>6A<br>Figs.<br>5-1<br>5-2 | Connect multimeter between terminals 14 and 16 of TB605. | 105 to 125 vac | If a normal reading is not obtained, check fuse F601. |

[1] Axial fan operation is controlled by thermostat switch S660. This switch opens below 86°F and closes above 112°F ±5°.

[2] When the converter drawer is extended, jack J951 is withdrawn from plug P601 and ac power is supplied to the converter by connector P955-J605. Refer to par. 5-22, Converter Blister, for details of reel E951.

reach the terminal boards for voltage measuring, pull out the related drawer all the way and lock it there.

### 5-6. CONVERTER POWER SUPPLY.

*a.* FUNCTION.— The converter power supply provides plate and filament voltages for operating local oscillators, RF and IF amplifiers, and frequency-standard circuits. Faulty operation will cause erratic operation or will disable the receiver entirely. Figure 5-2 is a functional schematic diagram of the converter power supply; figure 5-3 shows the location of parts.

*b.* PRELIMINARY CHECK.— Before performing the trouble-shooting steps of table 5-5, carefully inspect the power supply, especially the following:

(1) Cable connections at TB604, TB605, and TB606

(2) Seating of tubes V902 and V903 in their sockets

(3) Clamping of plug-in capacitors C901 and C902 in their sockets.

## WARNING

Potentials as high as 210 volts rms are present in the power-supply circuits. Avoid contact.

*c.* TEST EQUIPMENT AND SPECIAL TOOLS.— Use Multimeter AN/PSM-4B or equivalent, set at the range specified in the trouble-shooting step. No special tools are required.

*d.* CONTROL SETTINGS.— Set the controls to the positions shown in table 5-2.

*e.* CONVERTER POWER SUPPLY TROUBLE-SHOOTING CHART.— Table 5-5 is a trouble-shooting chart for the converter power supply. Perform the steps in the order shown and compare the results with those

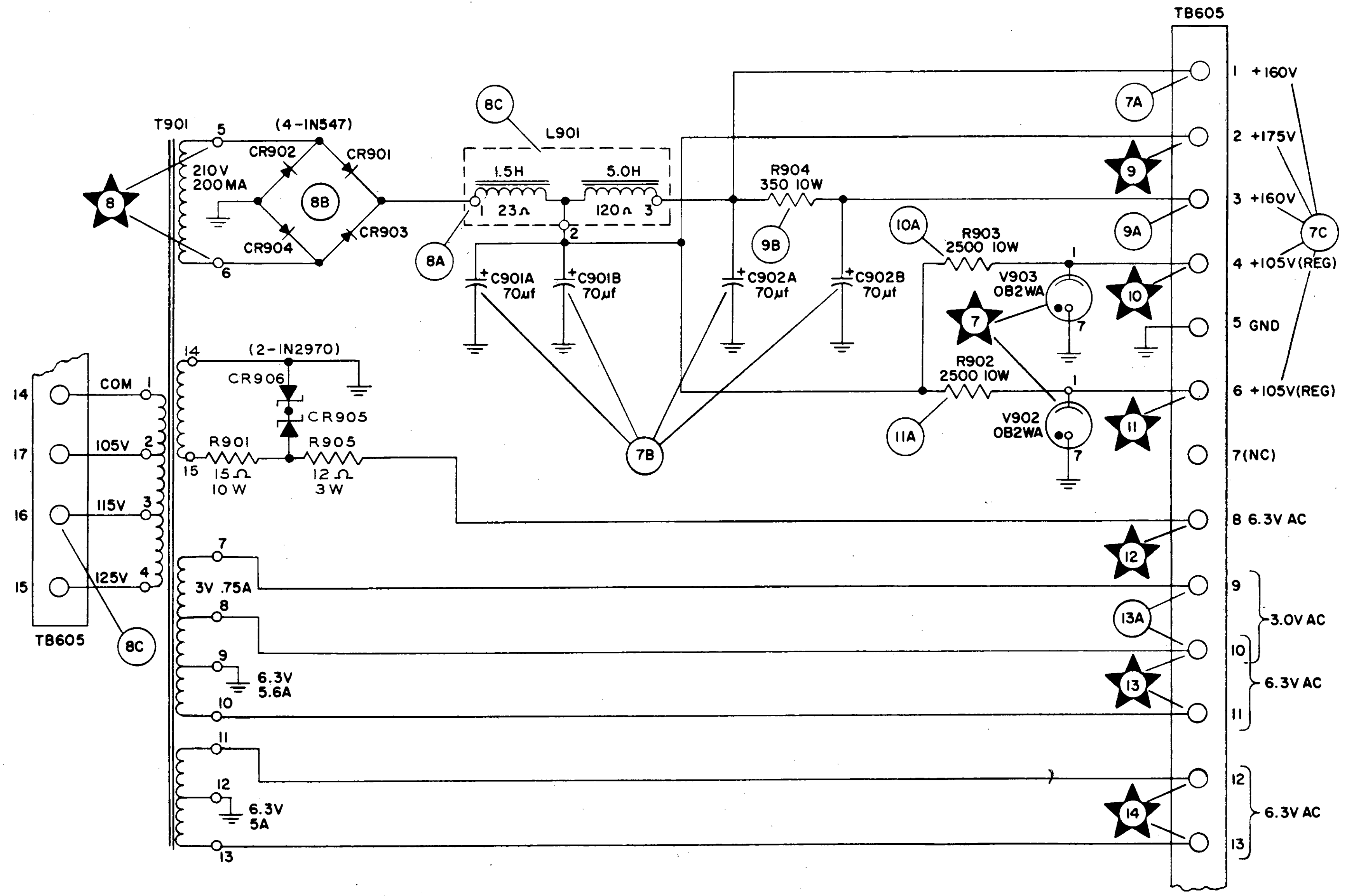

Figure 5—2. Converter Power Supply, Functional Schematic Diagram

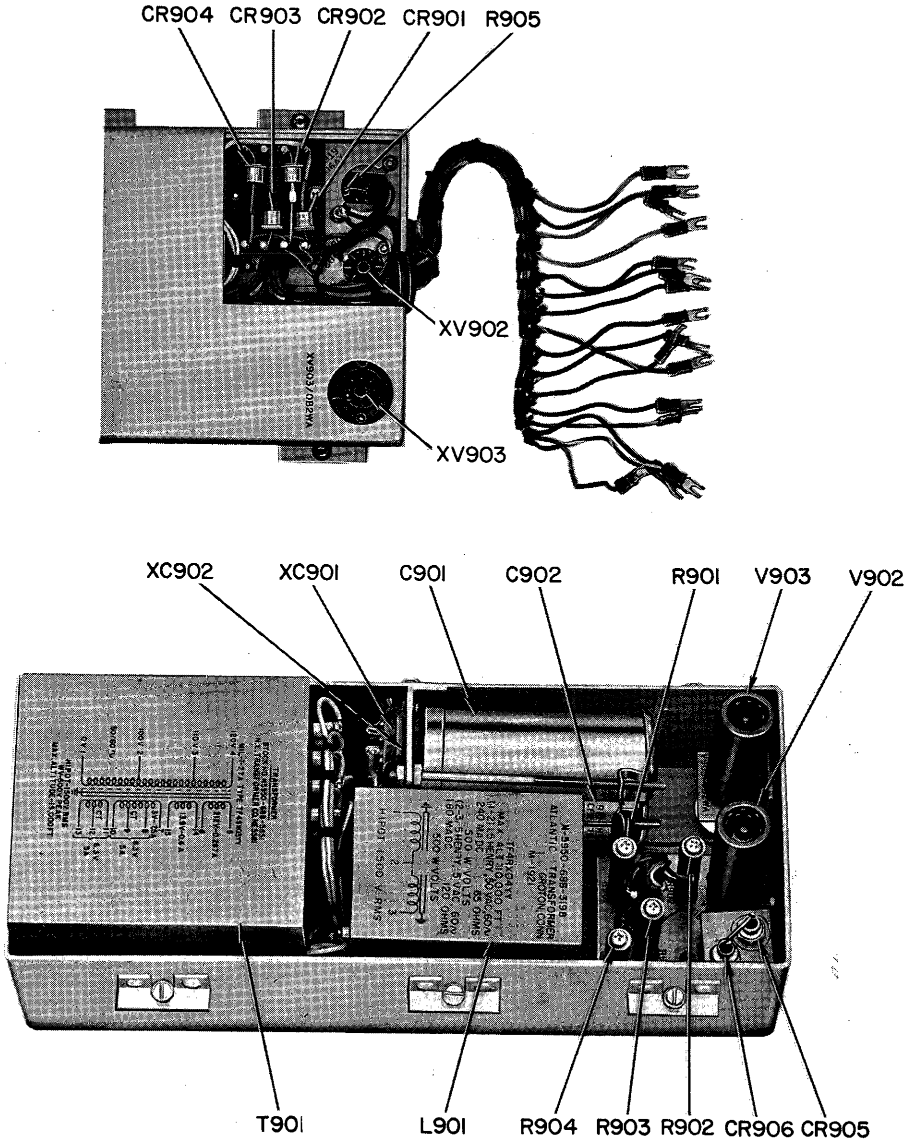

*Figure 5-3. Converter Power Supply, Location of Parts*

## TABLE 5-5. CONVERTER POWER SUPPLY, TROUBLE-SHOOTING CHART

| STEP | TEST POINT | PRELIMINARY ACTION | NORMAL INDICATION | NEXT STEP |
|---|---|---|---|---|
| 1 | 7<br>Fig.<br>5-2<br>5-3<br>5-4<br>Table<br>6-7 | Place POWER switch in ON position. | After 30 seconds, tubes V902 and V903 glow. | If tubes do not glow, perform step 6 in table 5-4, check V902 and V903. |

## TABLE 5-5. CONVERTER POWER SUPPLY, TROUBLE-SHOOTING CHART (cont)

| STEP | TEST POINT | PRELIMINARY ACTION | NORMAL INDICATION | NEXT STEP |
|---|---|---|---|---|
| 2 | 7A | Connect multimeter from terminal 1 of TB605 to chassis. Select the 200 vdc range. | +160 vdc ±20% tol. | If reading is normal, proceed to step 7. If reading is absent, proceed to step 3. |
| 3 | 7B | Replace plug-in capacitors C901 and C902 with new parts and repeat step 2. | +160 vdc ±20% tol. | If reading is normal, proceed to step 7. If reading is the same as step 2, put back original plug-in capacitors and proceed to step 4. |
| 4 | 7C | Disconnect leads 1, 2, 3, 4, and 6 from TB605 and repeat step 2. | +180 vdc ±20% tol. | If reading is slightly above normal, trouble is not in converter power supply but in subassemblies served by supply. If reading is absent, proceed to step 5. |
| 5 | 8<br>Figs.<br>5-2<br>5-3<br>5-4<br>Table<br>6-7 | Connect multimeter across terminals 5 and 6 of T901. Select the 400 vac range. | 210 vac ±20% tol. | If reading is normal, proceed to step 6; if abnormal, see if proper T901 primary terminals are in use for the ship's supply voltage. If no reading, T901 is defective; refer to par. 6-5*b*(11). |
| 6 | 8A<br>8B<br>8C | Connect multimeter from terminals 1 of L901 to chassis. Select the 400 vdc range. | +180 vdc ±20% tol. | If low, or no, reading is obtained, check rectifiers CR901, CR902, CR903, and CR904. One or more are defective. See par. 6-5*b*(11). If reading is normal, one or more sections of L901 are open. |
| 7 | 9<br>7C<br>Figs.<br>5-2<br>5-3<br>5-4 | Reconnect leads 1, 2, 3, 4, and 6 to TB605 (if removed). Connect multimeter from terminal 2 of TB605 to chassis. Select the 200 vdc range. | +175 vdc, ±20% tol. | If reading is absent, inspect power supply wiring for open lead, repeat step 2. |
| 8 | 9A<br>9B | Connect multimeter from terminal 3 of TB605 to chassis. Select the 200 vdc range. | +160 vdc ±20% tol. | If reading is abnormal, check resistor R904. Also, trouble can be in crystal oscillator subassembly. Remove lead 3 from terminal board TB605 and measure R904 with ohmmeter.<br>WARNING<br>Turn off power before checking R904. |

## TABLE 5-5. CONVERTER POWER SUPPLY, TROUBLE-SHOOTING CHART (cont)

| STEP | TEST POINT | PRELIMINARY ACTION | NORMAL INDICATION | NEXT STEP |
|---|---|---|---|---|
| 9 | ☆10<br>☆7<br>10A<br>Figs.<br>5-2<br>5-3<br>5-4<br>Table<br>6-7 | Connect multimeter from terminal 4 of TB605 to chassis. Select the 200 vdc range. | +105 vdc ±5% tol.; V903 glows. | If 903 does not glow, replace tube. If replacing tube does not give normal indication, remove lead to terminal 4 of TB605. If indication is now normal, the trouble is in the crystal oscillator or interpolation subassembly. If removing lead 4 does not give normal indication, R903 is defective; replace. Return lead to terminal 4 of TB605. |
| 10 | ☆11<br>☆7<br>11A<br>Figs.<br>5-2<br>5-3<br>5-4 | Connect multimeter from terminal 6 of TB605 to chassis. Select the 200 vdc range. | +105 vdc ±5% tol.; V902 glows. | If V902 does not glow, replace tube. If replacing tube does not give normal indication, remove lead to terminal 6 of TB605. If indication is now normal, trouble is in HF oscillator subassembly. If removing lead 6 does not give normal indication, R902 is defective; replace. Return lead to terminal 6 of TB605. |
| 11 | ☆12<br>12A<br>12B<br>Figs.<br>5-2<br>5-3<br>5-4 | Connect multimeter from terminal 8 of TB605 to chassis. Select the 10 vac range. | 6.3 vac ±10% tol. | If reading is too high, check tube V301 in the HF oscillator for open heater. Also check CR905 and CR906 for an open condition. If no reading is obtained R901 or R905 is defective. |
| 12 | ☆13<br>Figs.<br>5-2<br>5-3<br>5-4<br>Table<br>6-7 | Connect multimeter between terminals 10 and 11 of TB605. Select the 10 vac range. | 6.3 vac ±20% tol. | A no-voltage reading accompanied by extreme heating of cable leads indicates a short circuit in the filament circuit. Also check secondary of T901 (pins 8 and 10) for an open circuit. |

### TABLE 5-5. CONVERTER POWER SUPPLY, TROUBLE-SHOOTING CHART (cont)

| STEP | TEST POINT | PRELIMINARY ACTION | NORMAL INDICATION | NEXT STEP |
|---|---|---|---|---|
| 13 | 13A | Connect multimeter from terminal 9 of TB605 to chassis. Select the 10 vac range. | 6.15 vac ±20% tol. | No voltage reading shows the same trouble as in step 12. At T901, check for open winding at pins 7 and 9. |
| 14 | 14<br>Figs.<br>5-2<br>5-3<br>5-4 | Connect multimeter between terminals 12 and 13 of TB605. Select the 10 vac range. | 6.3 vac ±20% tol. | A no-voltage reading indicates the same trouble as in step 12. At T901, check for open winding at pins 11 and 13. |

shown in the NORMAL INDICATION column. If indications are abnormal, follow the instructions given in the NEXT STEP column. Figure 5-4 shows the location of test points. Table 6-7 provides voltage and resistance measurements at the tube sockets. Make voltage measurements with the power on, resistance measurements with the power off.

### 5-7. DEMODULATOR POWER SUPPLY.

*a.* FUNCTION.— The demodulator power supply provides plate and filament voltages for the operation of the AM, USB, and LSB detector-amplifier circuits of the receiver. Faulty operation of the power supply will cause erratic operation or will disable the receiver completely. Figure 5-5 is a functional schematic diagram; figure 5-6 shows the location of parts.

*b.* PRELIMINARY CHECK.— Before performing the trouble-shooting steps in table 5-6, inspect the demodulator power supply, especially the following:

(1) Cable connections at TB651, TB652, and TB1201

(2) Clamping of plug-in capacitors C1201 and C1202 in their sockets.

## WARNING

Potentials as high as 210 volts rms are present in the power-supply circuits. Avoid contact.

*c.* TEST EQUIPMENT AND SPECIAL TOOLS.— Use Multimeter AN/PSM-4B or equivalent, set to the range specified in each step. No special tools are required.

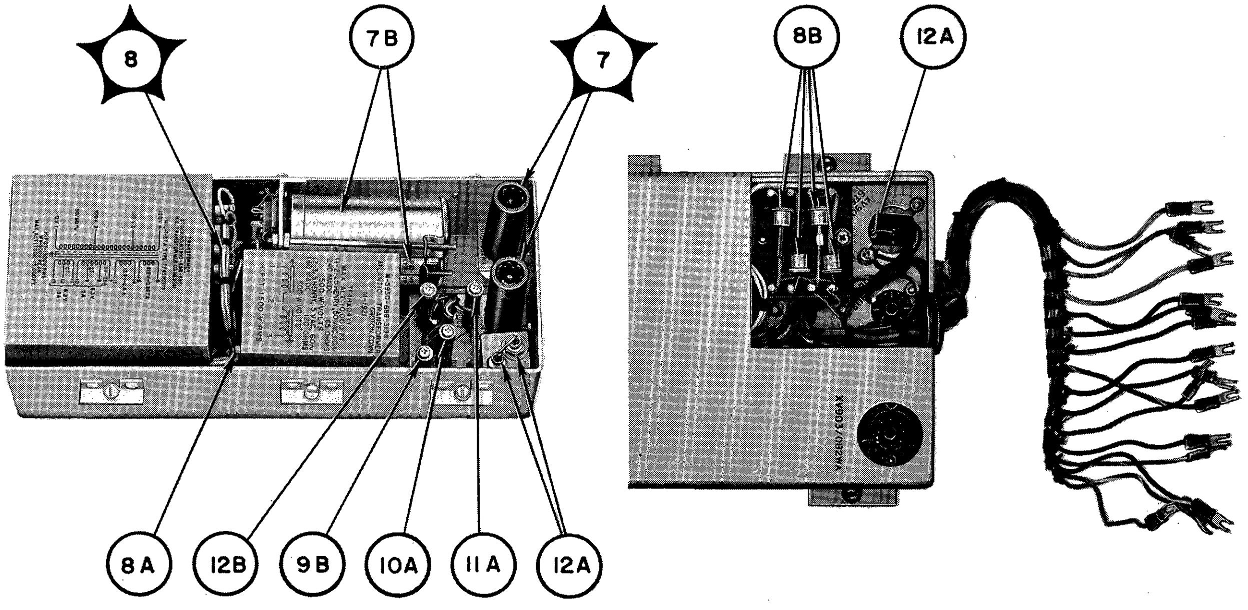

*Figure 5-4. Converter Power Supply, Location of Test Points*

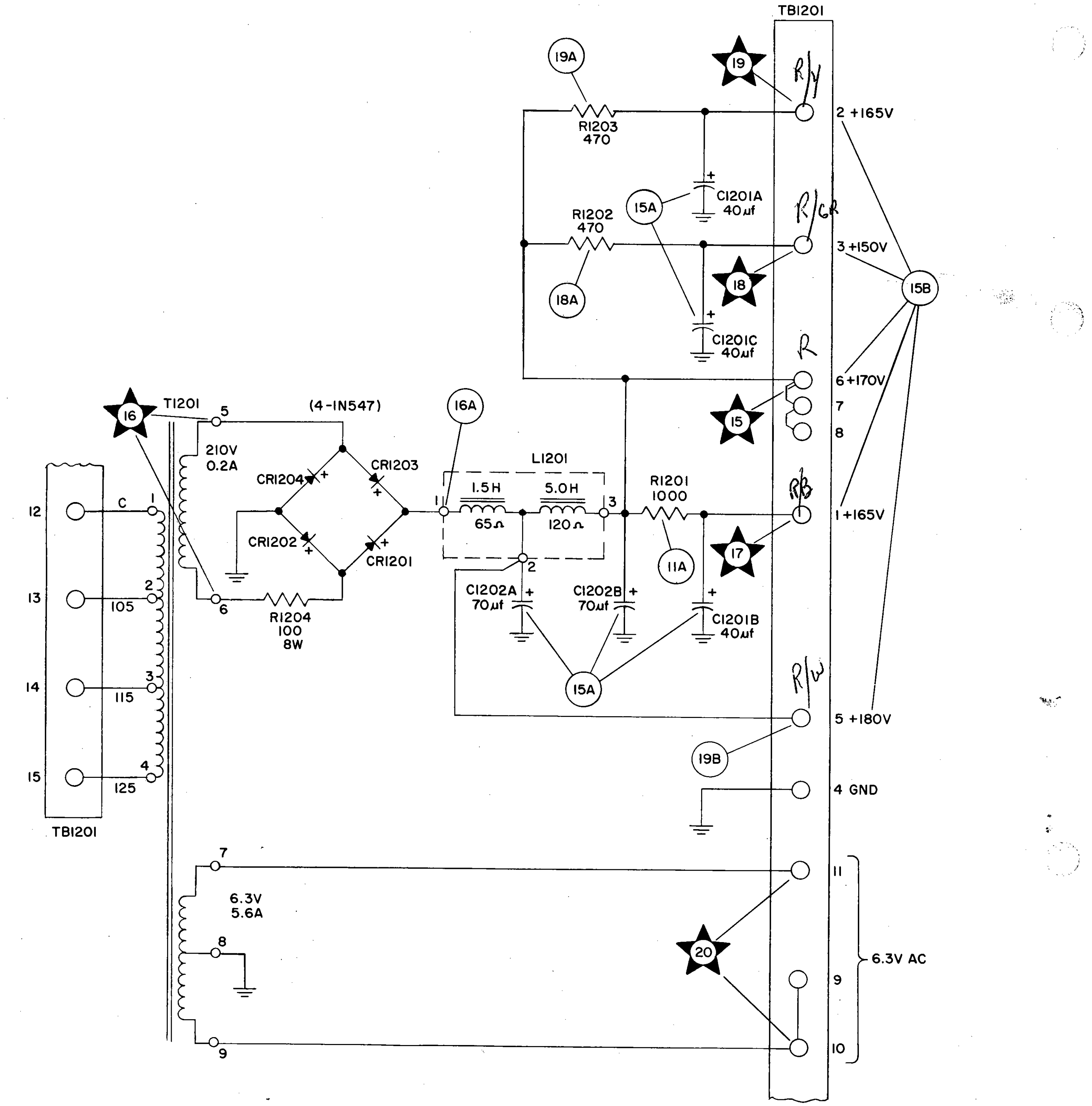

*Figure 5–5. Demodulator Power Supply, Functional Schematic Diagram*

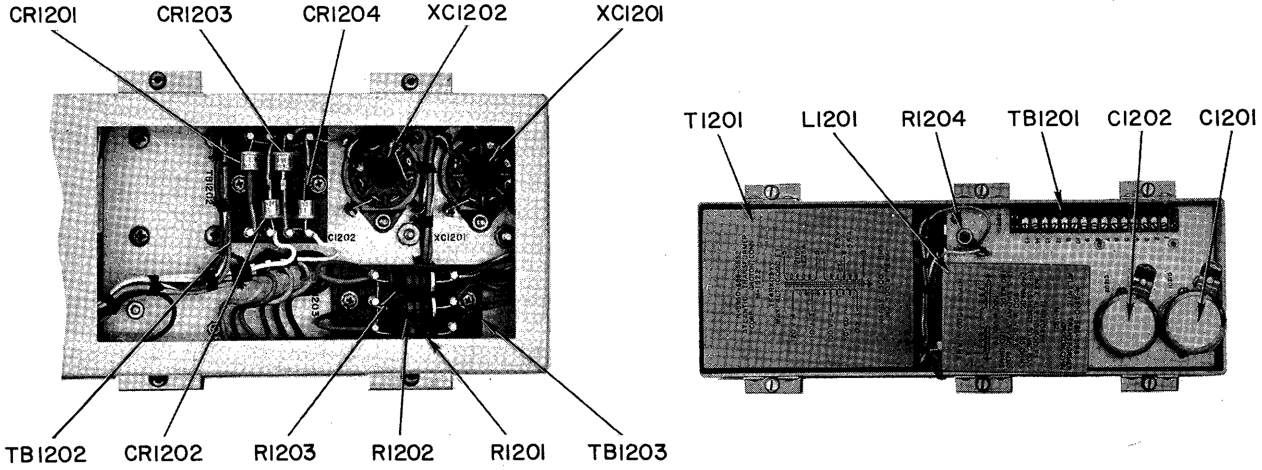

*Figure 5-6. Demodulator Power Supply, Location of Parts*

*d.* CONTROL SETTINGS.— Place the panel controls in the positions shown in table 5-2.

*e.* DEMODULATOR POWER SUPPLY TROUBLE-SHOOTING CHART.— Table 5-6 is the trouble-shooting chart for the demodulator power supply. Perform the steps in the order given and compare the results with those listed in the NORMAL INDICATION column. If an indication is abnormal, follow the instructions given in the NEXT STEP column. Figure 5-7 shows the location of test points.

### 5-8. ANTENNA COUPLER.

*a.* FUNCTION.— The antenna coupler provides three steps of signal attenuation at the input of the receiver. It also contains a protective fuse (F2801) in series with the antenna circuit. Faulty coupler operation will reduce the strength of the signal, with the coupler in NOR. position a blown fuse will cut off the signal entirely, preventing reception. Figure 5-8 is a functional schematic diagram of the antenna coupler, and figure 5-9 shows the location of parts. A simplified schematic diagram of the coupler may be found in figure 4-6.

*b.* PRELIMINARY CHECK.— With the power off, inspect the antenna circuit cabling before trouble-shooting the coupler. Examine the fuse. With an ohmmeter, test the signal circuit from the antenna input connector (J957) to the antenna coupler connector (J2802) to establish the continuity of the signal path and the absence of short circuits in the cables or connectors.

*c.* TEST EQUIPMENT AND SPECIAL TOOLS.— Use Multimeter AN/PSM-4B or equivalent. No special tools are required.

*d.* CONTROL SETTINGS.— The ANT. CPLG. switch (S2801) is the only control used in this test.

*e.* ANTENNA COUPLER TROUBLE-SHOOTING. — Figure 5-8 shows separate functioning circuits for each position of the ANT. CPLG. switch. Disconnect

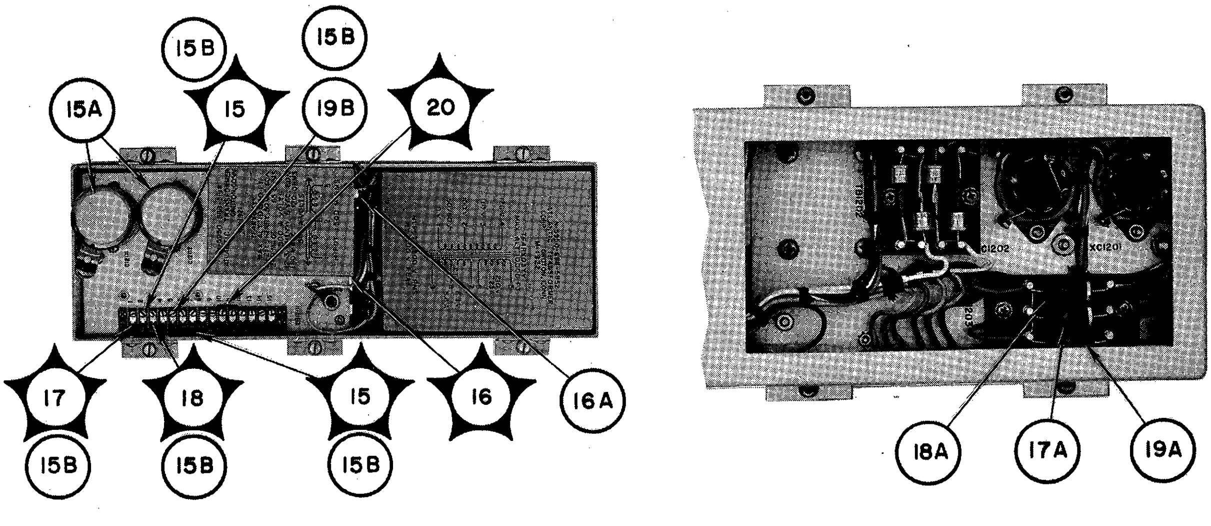

*Figure 5-7. Demodulator Power Supply, Location of Test Points*

the coax cables at J2802 and J2801. With the multimeter set at the R x 1 multiplier range, measure the circuit resistance from J2802 to J2801 and from J2801 to ground for each position of the ANT. CPLG. switch. Figure 5-10 shows the location of test points.

(1) Normal indications for the ★21 measurement, J2802 to J2801, are as follows:

| *Position* | *Resistance (ohms)* |
|---|---|
| NOR. | 0 |
| 1 | 560 ±10% |
| 2 | 560 ±10% |
| 3 | 642 ±10% |

### TABLE 5-6. DEMODULATOR POWER SUPPLY, TROUBLE-SHOOTING CHART

| STEP | TEST POINT | PRELIMINARY ACTION | NORMAL INDICATION | NEXT STEP |
|---|---|---|---|---|
| 1 | ★15<br>Figs.<br>5-5<br>5-6<br>5-7 | Connect multimeter from terminal 6 of TB1201 to chassis. Select the 200 vdc range. Place POWER switch in the ON position. | +170 vdc ±20% tol. | If reading is normal, proceed to step 6. If reading is low or absent, proceed to step 2. |
| 2 | 15A | Replace plug-in capacitors C1201 and C1202. | +170 vdc ±20% tol. | If reading is normal, proceed to step 6. If reading is the same as step 1, put back the original plug-in capacitors and proceed to step 3. |
| 3 | 15B | Disconnect leads 1, 2, 3, 5, and 6 from TB1201 and repeat step 1. | +185 vdc ±20% tol. | If reading is slightly above normal, the trouble is not in the demodulator power supply but in subassemblies served by the supply. If reading is the same as in step 1, proceed to step 4. |
| 4 | ★16<br>Figs.<br>5-5<br>5-6<br>5-7 | Connect multimeter across terminals 5 and 6 of T1201. Select the 400 vac range. | 210 vac ±20% tol. | If reading is abnormal, make certain that proper primary taps are used on T1201. If there is no reading, T1201 is defective; refer to par. 6-5*c*(5). |
| 5 | 16A | Connect multimeter from terminal 1 of L1201 to chassis. Select the 400 vdc range. | +185 vdc ±20% tol. | If low or no reading is obtained, rectifiers CR1201, CR1202, CR1203, and CR1204 are suspect. One or more are defective. If reading is normal, one or more sections of L1201 are open. Refer to par. 6-5*c*(5). |
| 6 | ★17<br>Figs.<br>5-5<br>5-6<br>5-7 | Reconnect leads 1, 2, 3, 5, and 6 to TB1201 (if removed). Connect multimeter from terminal 1 of TB1201 to chassis. Select the 200 vdc range. | +165 vdc ±20% tol. | If reading is abnormal, suspect R1201. The trouble can also be in the AM detector-amplifier. Remove lead 1 from TB1201 and measure R1201 with ohmmeter.<br>WARNING<br>Turn off power before checking R1201. |
| 7 | ★18<br>18A | Connect multimeter from terminal 3 of TB1201 to chassis. Select the 200 vdc range. | +150 vdc ±20% tol. | If reading is abnormal, suspect R1202. The trouble can also be in the USB detector-amplifier. Remove lead 3 from TB1201 and measure R1202 with ohmmeter.<br>WARNING<br>Turn off power before checking R1202. |

**TABLE 5-6. DEMODULATOR POWER SUPPLY, TROUBLE-SHOOTING CHART (cont)**

| STEP | TEST POINT | PRELIMINARY ACTION | NORMAL INDICATION | NEXT STEP |
|---|---|---|---|---|
| 8 | ★19<br>(19A)<br>Figs.<br>5-5<br>5-6<br>5-7 | Connect multimeter from terminal 2 of TB1201 to chassis. Select the 200 vdc range. | +165 vdc ±20% tol. | If reading is abnormal, suspect R1203. The trouble can also be in the LSB detector-amplifier. Remove lead 2 from TB1201 and measure R1203 with ohmmeter.<br>WARNING<br>Turn off power before checking R1203. |
| 9 | (19B) | Connect multimeter from terminal 5 on TB1201 to chassis. Select the 200 vdc range. | +180 vdc ±20% tol. | If there is no reading, check terminal 5 lead wiring. |
| 10 | ★20<br>Figs.<br>5-5<br>5-6<br>5-7 | Connect multimeter between terminals 10 and 11 of TB1201. Select the 10 vac range. | 6.3 vac ±20% tol. | If reading is very low or absent, inspect cables for evidence of overheating caused by short circuit in power supply or in subassemblies served by this filament winding. Check T1201 for an open secondary winding (pins 7 and 9). |

(2) Normal indications for the ★22 measurements, J2801 to ground, are:

| *Position* | *Resistance (ohms)* |
|---|---|
| NOR. | Infinity |
| 1 | 220 ±10% |
| 2 | 9 ±10% |
| 3 | 9 ±10% |

When the ANT. CPLG. switch is in NOR. position, all resistors are disconnected. If an attenuator resistor is suspected of being defective, it should be measured directly at switch S2801 to verify the initial measurements.

## 5-9. PRESELECTOR.

*a.* FUNCTION.— The preselector consists of the first and second RF amplifier stages and the first conversion mixer stage. Faulty operation of the preselector can reduce the strength of received signals or prevent reception completely. Figure 5-11 is a functional schematic diagram of the preselector.

*b.* ACCESS.— The preselector is located in the lower converter deck. To expose it, pull out the converter drawer and raise the upper deck. Figure 5-12 shows the location of parts.

*c.* PRELIMINARY CHECK.— With the power off, make a preliminary inspection of the preselector before beginning trouble-shooting, with emphasis on the following:

(1) Seating of tubes V51, V101, and V151 in their sockets

(2) Cable connections at J51, J102, J151, J153, and J154

(3) Soldered connections at chassis feed-through terminals.

## WARNING

Potentials as high as 210 volts rms are present in the power-supply circuits. Avoid contact.

*d.* TEST EQUIPMENT AND SPECIAL TOOLS.— Use Multimeter AN/PSM-4B, VTVM ME-30/U, and Signal Generator AN/URM-25D, or their equivalent. No special tools are required.

*e.* CONTROL SETTINGS.— Set the panel controls to the positions shown in table 5-2.

*f.* PRESELECTOR TROUBLE-SHOOTING CHART.— Trouble-shooting the preselector consists of measuring the initial supply voltages and tracing signals through the circuits. Table 5-7 is the trouble-shooting chart for the preselector. Figure 5-13 shows the location of test points. Table 6-5 gives voltage and resistance measurements. Follow the steps of table 5-7 in the order shown and compare the results with those in

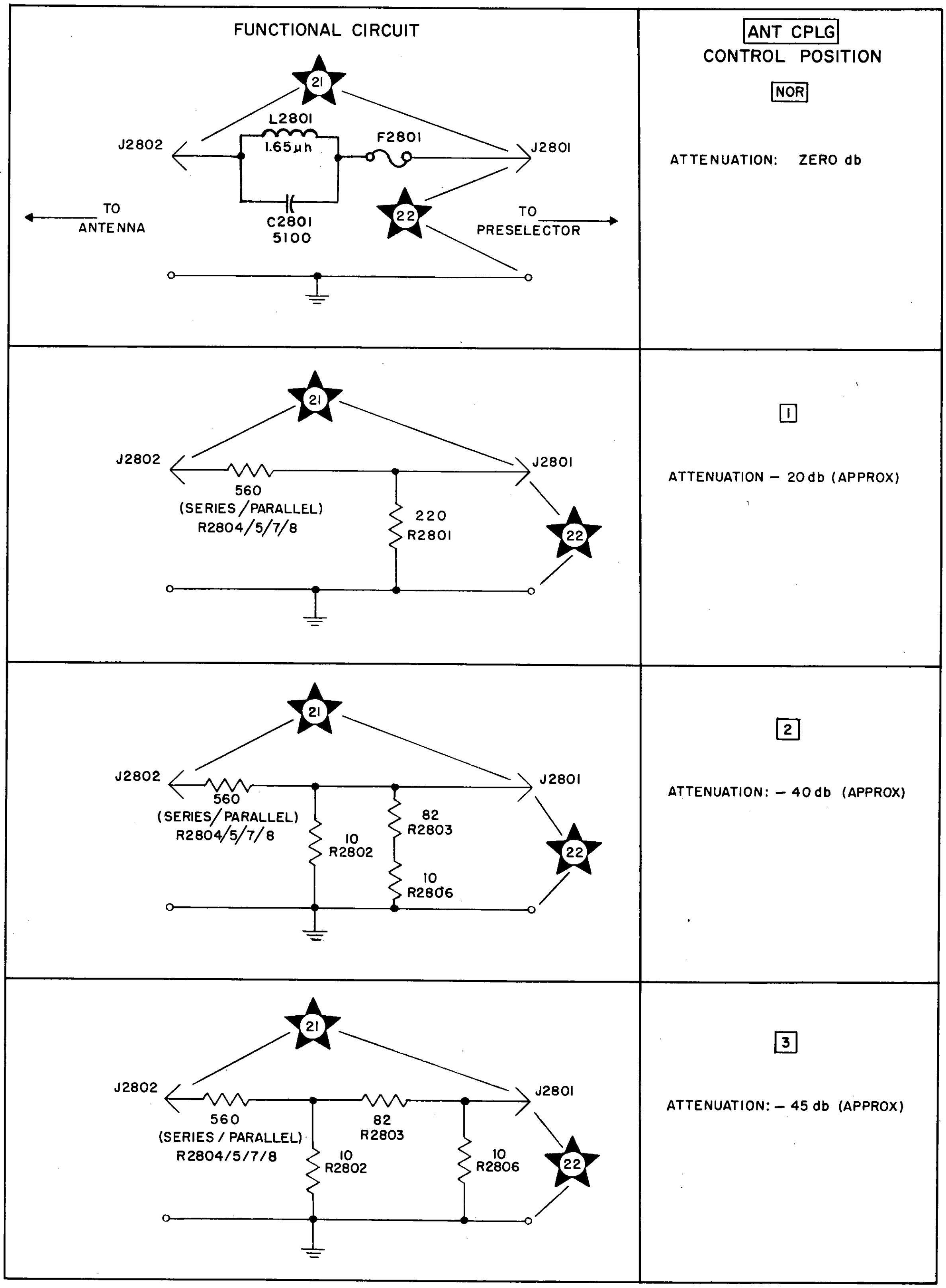

*Figure 5–8. Antenna Coupler, Functional Schematic Diagram*

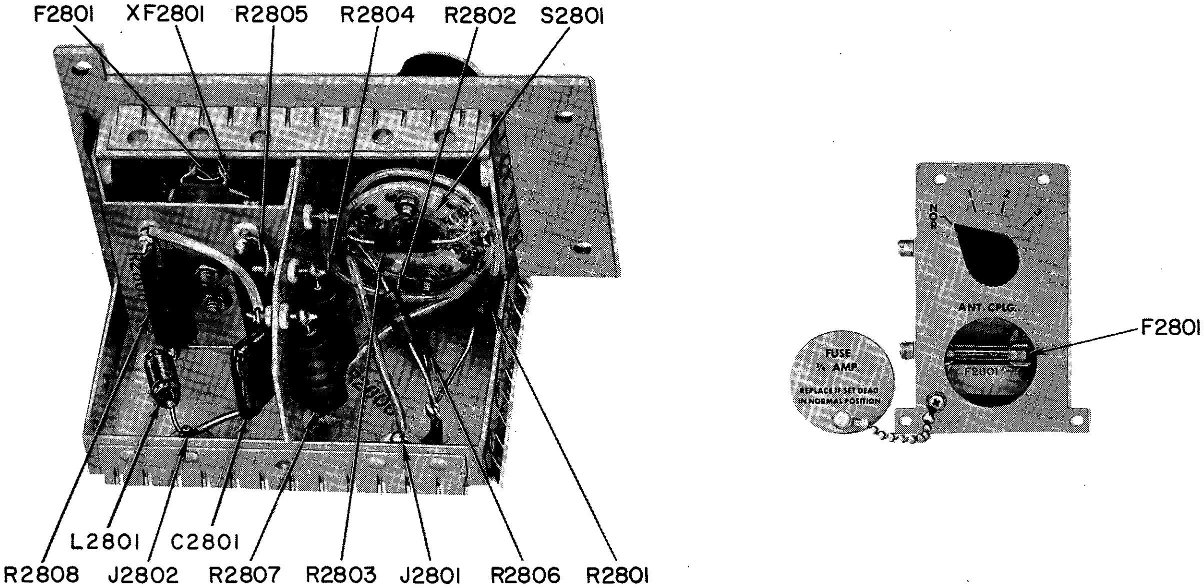

*Figure 5-9. Antenna Coupler, Location of Parts*

the NORMAL INDICATION column. If an indication is abnormal, follow the instructions given in the NEXT STEP column.

### 5-10. TUNABLE IF FILTER.

*a.* DIAGRAMS.— Figure 5-14 is a functional schematic diagram of the tunable IF filter. Refer also to figure 5-11, the functional schematic diagram of the preselector, because the plate circuit load for V151, the preselector mixer stage, is part of the tunable IF filter circuit. Figure 5-15 shows the location of parts of the tunable IF filter and figure 5-16 the location of test points.

*b.* PRELIMINARY CHECK.— Before trouble-shooting the tunable IF filter, inspect the following:

(1) Input and output connectors J351 and J352

(2) Soldered connections at chassis feed-through E351.

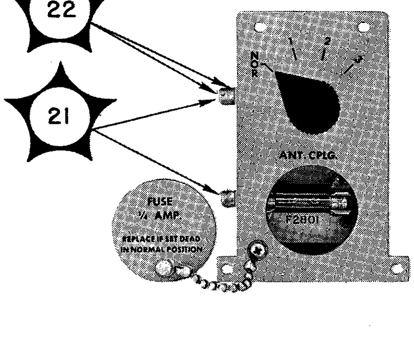

*Figure 5-10. Antenna Coupler, Location of Test Points*

*c.* TEST EQUIPMENT AND SPECIAL TOOLS.— Use Multimeter AN/PSM-4B, VTVM ME-30/U, and RF Signal Generator AN/URM-25D or their equivalent. No special tools are required.

*d.* CONTROL SETTINGS.— Set the panel controls to the positions shown in table 5-2.

*e.* TUNABLE IF FILTER TROUBLE-SHOOTING. — The operation of the tunable IF filter is tested with receiver power off and cables removed from the input and output connectors J351 and J352. DC supply measurements are made with the power on.

(1) TEST POINTS ★29, •29A, •29B.— Place POWER switch in ON position and connect the multimeter, set at 200 vdc range, between feed-through terminal E351 and the chassis. The normal indication is 120 vdc ±20% tol. If there is no reading try terminal 1 of TB603. The normal indication here is 160 vdc ±20% tol. If the indication is normal, place the POWER switch in OFF position and check the continuity of L351 and L352 by measuring between feed-through terminal E351 and the contact of connector J351.

(2) TEST POINTS •29C, •30A.—Turn power OFF and remove J351-J352 cables. Connect the RF signal generator between connector J351 and chassis. Adjust the generator for a 1675 kc signal unmodulated with an output signal of 1.0 v rms. Tune the receiver TUNING (kc) indicator to 50.0 kc.

Connect the VTVM between connector J352 and chassis. A reading of 0.05 v rms is normal. If reading is not normal, remove the tunable IF filter subassembly and check. Removal instructions are given in par. 6-5*b*(3).

## TABLE 5-7. PRESELECTOR, TROUBLE-SHOOTING CHART

| STEP | TEST POINT | PRELIMINARY ACTION | NORMAL INDICATION | NEXT STEP |
|---|---|---|---|---|
| 1 | 23<br>23A<br>to<br>23E<br>Figs.<br>5-11<br>5-12<br>5-13 | Connect multimeter, set at 200 vdc range, between chassis feed-through capacitors and chassis; tolerance ±20%. | C165: +160 vdc | If no voltage is present, perform step 4 in table 5-5. Check capacitor C165.<br>WARNING<br>Turn power off before making ohmmeter measurements. |
|  | 23A |  | C151: +100 vdc | If no voltage is present, check R151 and C151. |
|  | 23B |  | C116: +100 vdc | If no voltage is present, check R107, C116, and C112. |
|  | 23C |  | E101: +100 vdc | If no voltage is present, check R101 and C71. |
|  | 23D |  | E105: +100 vdc | If no voltage is present, check primary winding of L101 (L102, L103, and L104 on Bands 2, 3, 4). |
|  | 23E |  | E55: +100 vdc | If no voltage is present, check R56. |
| 2 | 24<br>24A<br>Figs.<br>5-11<br>5-12<br>5-13 | Connect multimeter between terminals 8 and 9 of TB603. Select the 10 vac range. | 6.3 vac ±20% tol. | If no voltage is present, perform step 12 in table 5-5. If voltage is present but V51, V101, or V151 do not light, check each tube for open heater.<br>If the tube is good, measure 6.3 vac directly at pins 3 and 4 of each socket. If no voltage is present, check related filament chokes L62, L63, L105, L106, L155, and L156. Check related filament bypass capacitors. |

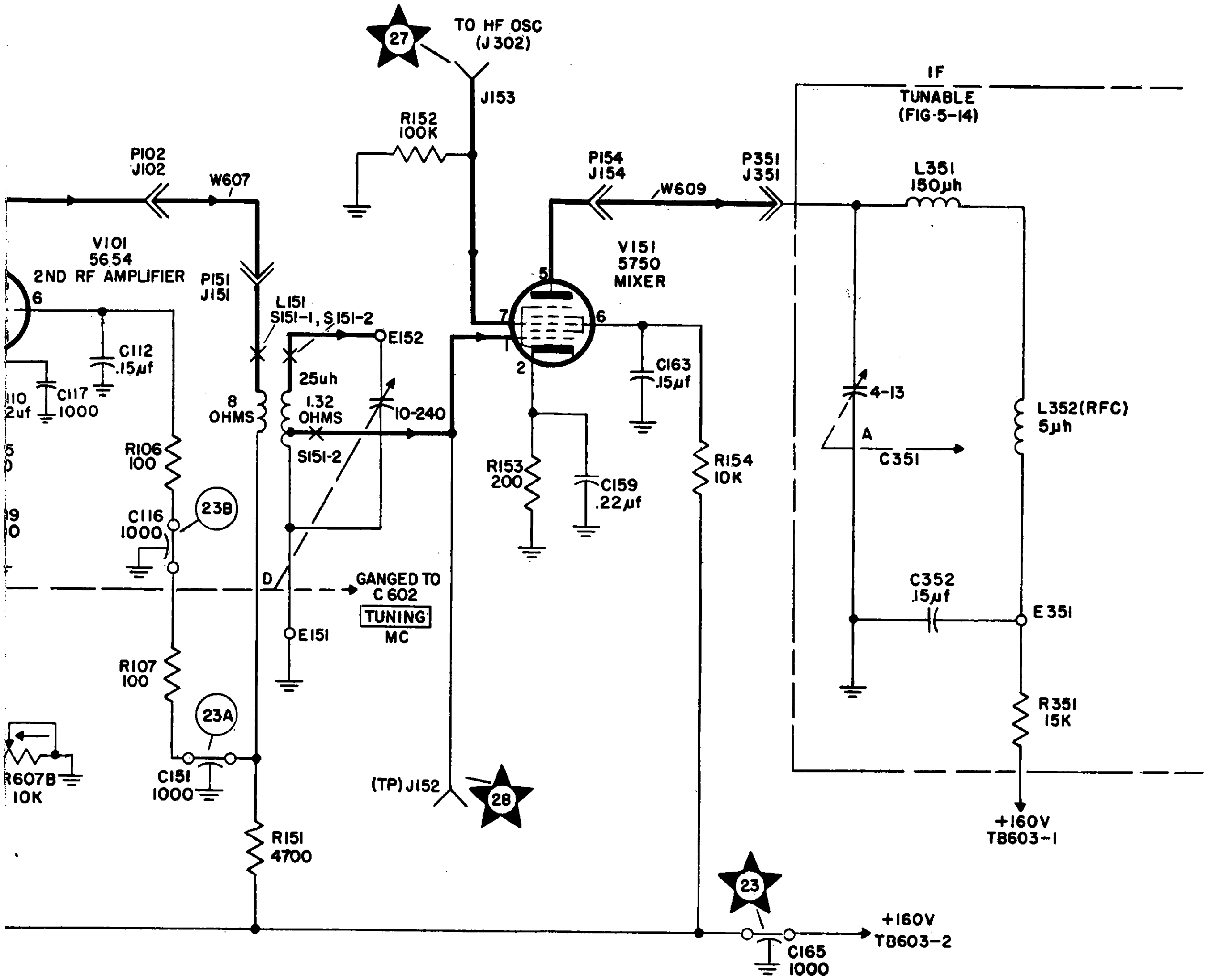

NOTES

CIRCUIT SHOWN FOR BAND 1 OPERATION.

X = BAND SWITCH CONTACTS ON S51, S52, S101, S151-1 AND S151-2

—o— FEEDTHRU TERMINAL

*Figure 5—11. Preselector, Functional Schematic Diagram*

### TABLE 5-7. PRESELECTOR, TROUBLE-SHOOTING CHART (cont)

| STEP | TEST POINT | PRELIMINARY ACTION | NORMAL INDICATION | NEXT STEP |
|---|---|---|---|---|
| 3 | ★25<br>(25A)<br>(25B)<br>Figs.<br>5-11<br>5-12<br>5-13 | Turn receiver power off. Remove V51 from its socket. Connect signal generator between J51 and chassis, adjust for 2.0 mc unmodulated signal (0.25 volt).<br>Tune receiver to 2.0 mc. Measure signal level at test point J52 with VTVM at appropriate rms range, tolerance 10%. | TP J52: 1.7 v rms | If no signal is present, trace the signal at feed-through terminals E51 and E53. Check rf coils L51 and L58 (L52, L53, L54, L59, L60, and L61 on Bands 2, 3, 4). Check coupling capacitor C59. |
|  | ★26<br>(26A)<br>Figs.<br>5-11<br>5-12<br>5-13 | Replace V51 in its tube socket and remove V101. Connect signal generator to E105 (generator output is the same as that used in step 3). Measure signal at test point J101 with VTVM. | TP J101: 1.0 v rms | If no signal is present, check L101 and capacitor C107. |
|  | ★28 | Replace V101 in its tube socket and remove V151. Connect generator to J151. Adjust its output for 0.18 v rms. Measure signal at test point J152 with VTVM. | TP J152: 0.8 v rms | If no signal is present, check L151. |
| 4 | ★27 | Replace V151 in its tube socket and remove generator. Turn receiver power on. Measure HFO injection signal at test point J153 with VTVM. | J153: .10 v rms | If no signal is present, refer to par. 5-14. |

## 5-11. INJECTION IF AMPLIFIER.

*a.* DIAGRAMS.— Figure 5-17 is a functional block diagram of the injection IF amplifier. For a complete schematic diagram, refer to figure 6-16. The following functional schematic diagrams of injection IF amplifier are also provided:

| *Figure* | *Diagram* |
|---|---|
| 5-18 | 1625-1725 and 220 kc IF amplifier |
| 5-19 | 825 kc injection amplifier |
| 5-20 | 1405-1505 kc injection amplifier |
| 5-21 | 140 kc injection amplifier |

Figure 5-22 shows the location of parts in the injection IF amplifier and figure 5-23 the location of test points.

*b.* ACCESS.— The injection IF is located in the lower converter deck. For access to the top, raise the upper deck; for access to the bottom — and to the horizontally positioned tubes, rotate the entire converter drawer to its vertical position.

*c.* PRELIMINARY CHECK.— With the power off, make a preliminary inspection before trouble-shooting the injection IF, with emphasis on the following:

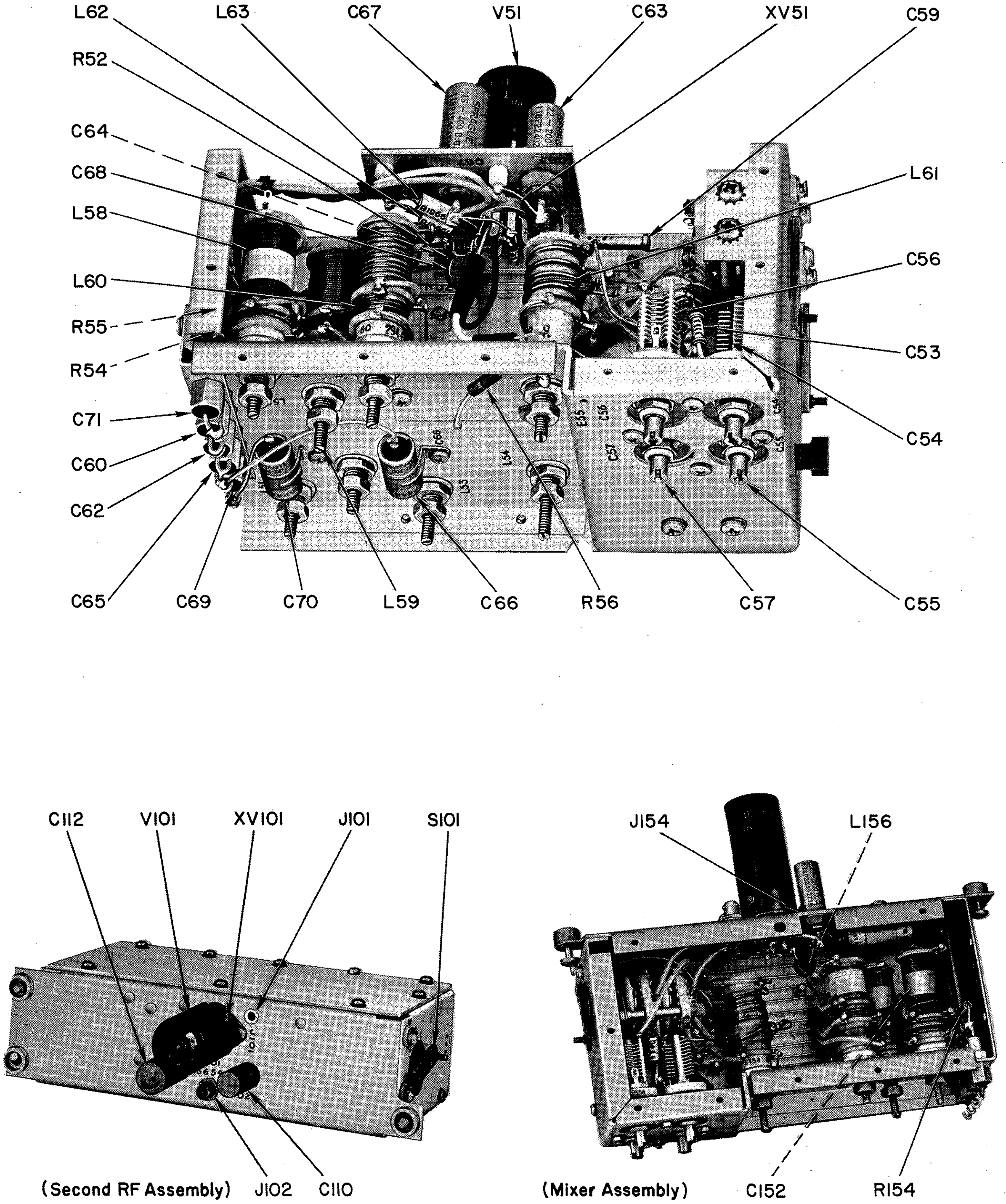

(Second RF Assembly)

(Mixer Assembly)

*Figure 5—12. Preselector, Location of Parts*
*(Sheet 1 of 3)*

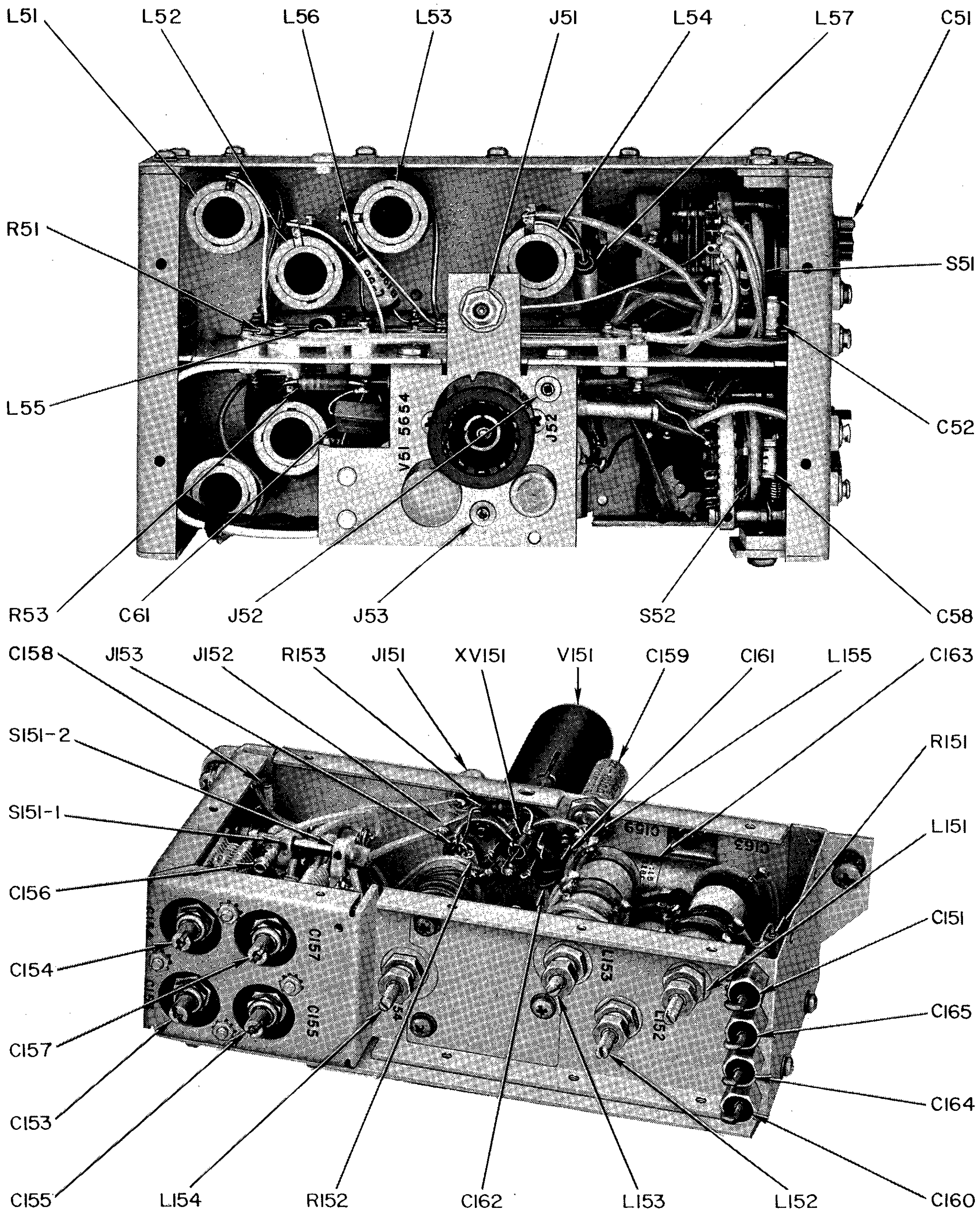

*Figure 5—12. Preselector, Location of Parts*
*(Sheet 2 of 3)*

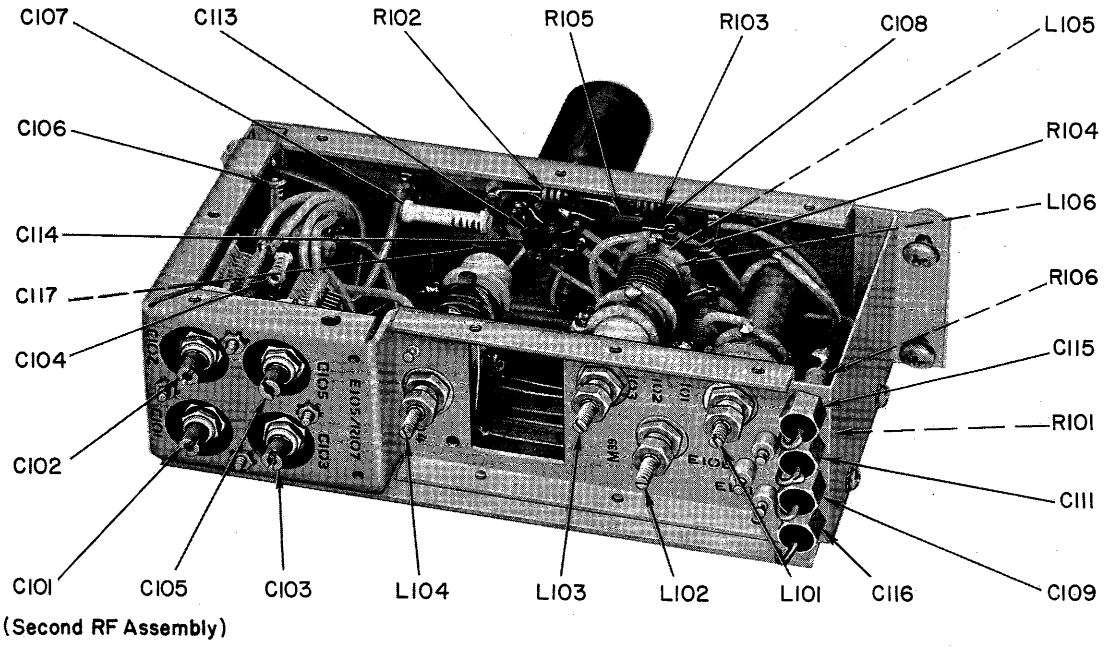

*Figure 5-12. Preselector, Location of Parts (Sheet 3 of 3)*

(1) Seating of tubes V501 through V508 in their sockets

(2) Cable connections at J501, J507, J508, J509, and J511

(3) All soldered connections at chassis feed-through terminals.

## WARNING

Potentials as high as 210 volts rms are present in the power-supply circuits. Avoid contact.

*d.* TEST EQUIPMENT AND SPECIAL TOOLS.— Use Multimeter AN/PSM-4B, VTVM ME-6D/U, ME-30/U, and two AN/URM-25D Signal Generators, or their equivalents. No special tools are required.

*e.* CONTROL SETTINGS.— Place the controls in the positions listed in table 5-2. Exceptions will be made in certain steps of the trouble-shooting procedure.

*f.* INJECTION IF TROUBLE-SHOOTING CHART. — Table 5-8 is the trouble-shooting chart for the injection IF amplifier. Perform the steps in the order shown and compare results with those listed in the NORMAL INDICATION column. If the indication is abnormal, follow the instructions given in the NEXT STEP column. Table 6-6 is the voltage and resistance measurements for the injection IF amplifier.

### 5-12. 80 KC FILTER.

*a.* DIAGRAMS.— Figure 5-24 is a functional schematic diagram of the 80 kc filter, and figure 5-25 shows the location of parts and test points. Refer also to figure 5-18 because the plate circuit load for V503, injection IF mixer, is located in the 80 kc filter (FL1301).

*b.* ACCESS.— The 80 kc filter is located in the lower demodulator deck. For access, extend the demodulator and raise the upper deck.

*c.* PRELIMINARY CHECK.— Before trouble-shooting the 80 kc filter, check the following:

(1) Input connector J1301

(2) Output connectors J1302 and J1303

(3) The soldered connection at feed-through capacitor C1304.

*d.* TEST EQUIPMENT AND SPECIAL TOOLS.— Use Multimeter AN/PSM-4B, VTVM ME-30/U, and Signal Generator AN/URM-25D or their equivalents. No special tools are required.

*e.* CONTROL SETTINGS.— Place the controls in the positions listed in table 5-2. In addition, place the POWER switch in ON position. Allow 30 seconds for warm-up.

*f.* 80 KC FILTER TROUBLE-SHOOTING.

(1) Connect the multimeter, set at 200 volts, between feed-through capacitor C1304 and the chassis, test point ★40. The normal reading is +170 vdc ±20% tol. If the reading is abnormal, refer to table 5-6, demodulator power supply, and perform as many steps as are necessary to obtain normal reading.

(2) Turn power off and disconnect cables J1301, J1302 and J1303 from filter. Connect the signal generator to J1301 through a 22 k resistor and adjust the generator for an 80 kc, 100 mv output.

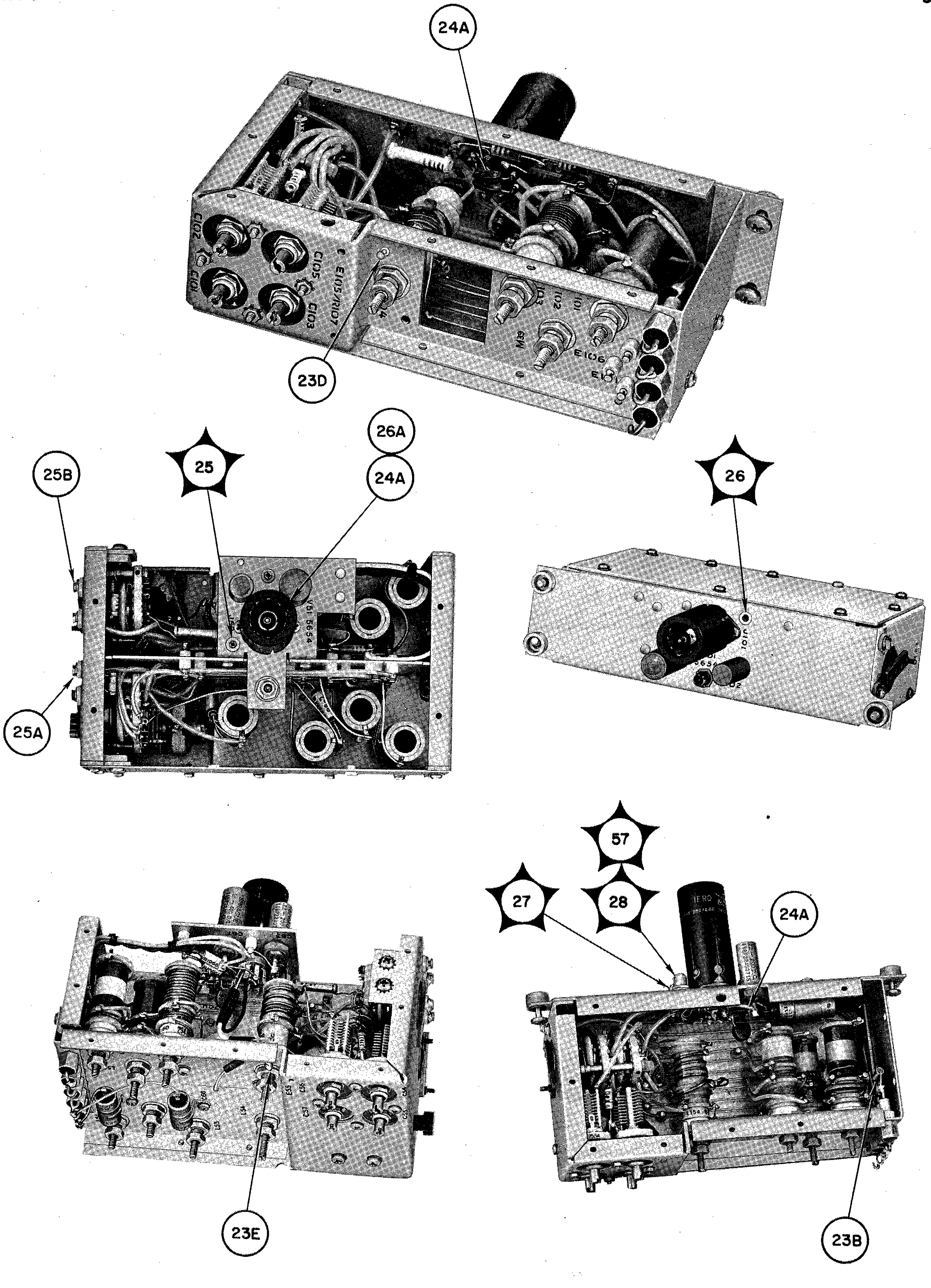

*Figure 5—13. Preselector, Location of Test Points*

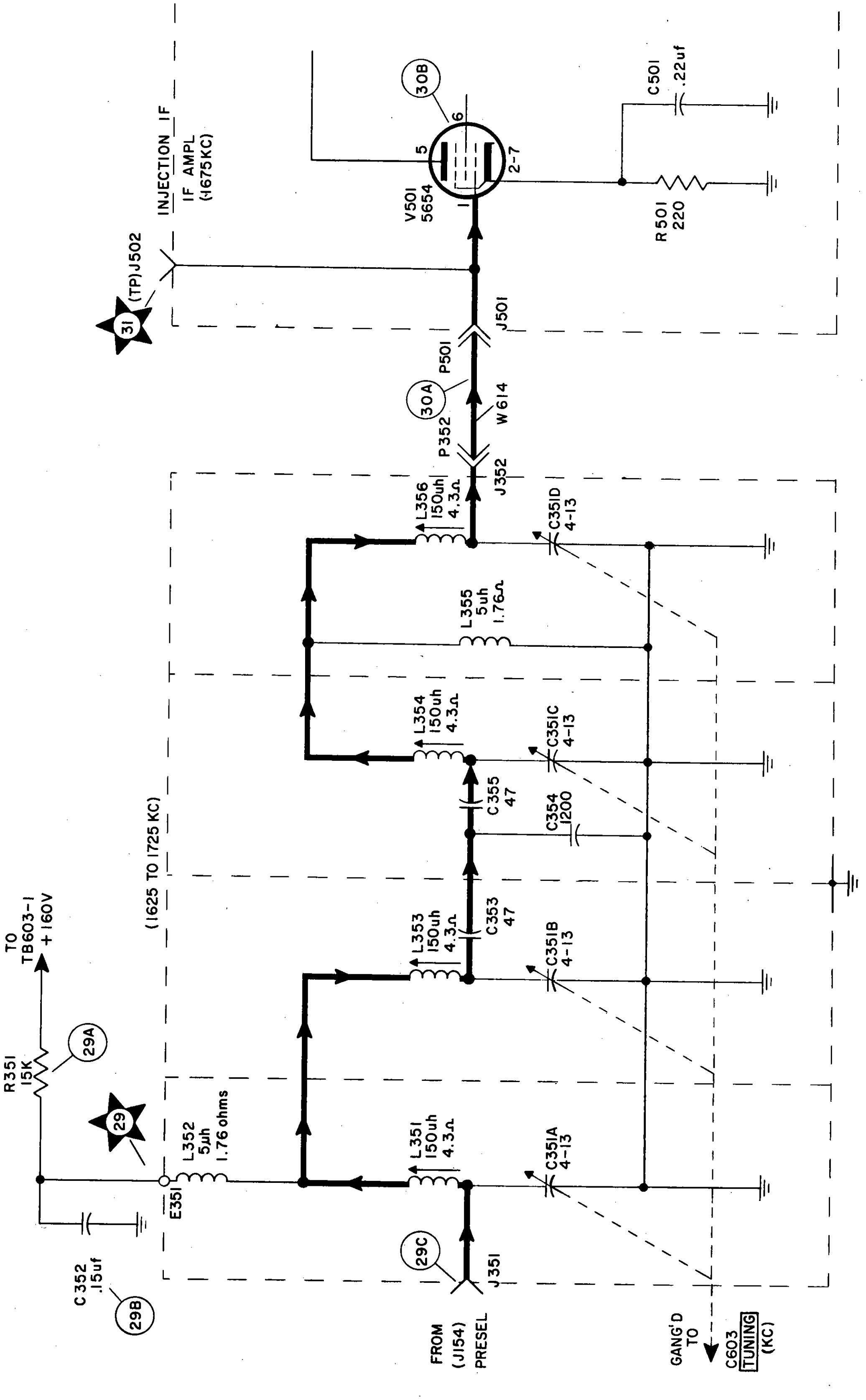

Figure 5–14. Tunable IF Filter, Functional Schematic Diagram

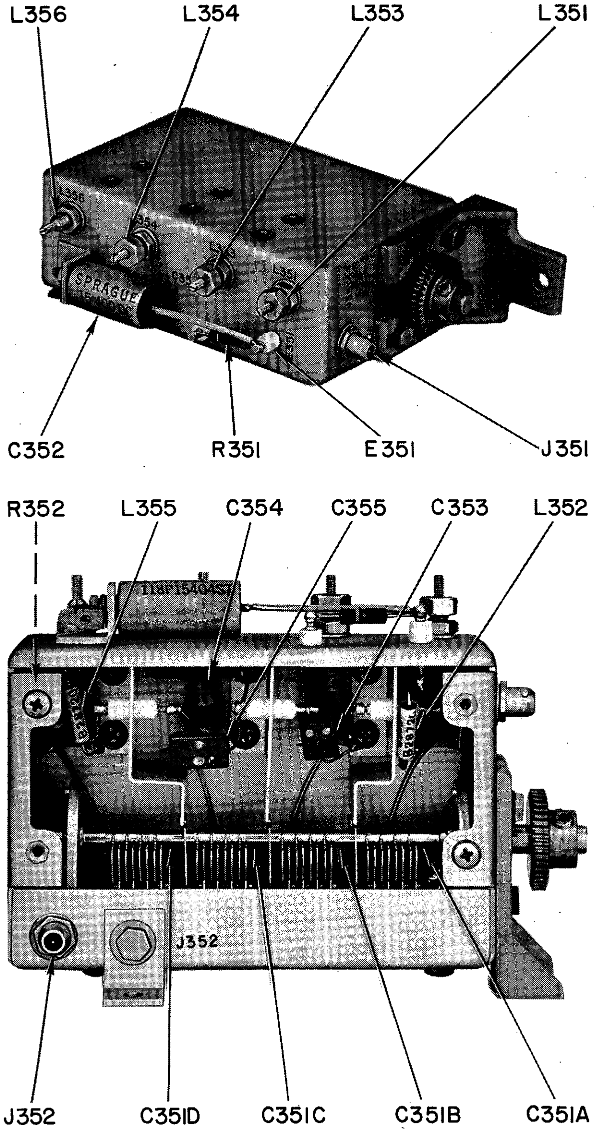

*Figure 5-15. Tunable IF Filter, Location of Parts*

(3) Connect the VTVM to connector J1302 and J1303 in turn. A normal filter output reading is 50 mv (approx) at each connector.

(4) Check the filter bandpass by adjusting the generator first to 76 kc and then to 84 kc. Filter output should be 50 mv within 1 db over this range. Alignment information for filter FL1301 is given in paragraph 6-4*a*.

### 5-13. AM DETECTOR-AMPLIFIER.

*a.* DIAGRAMS.— Figure 5-26 is a functional block diagram showing the relationship among circuit sections of the AM detector-amplifier. For a complete schematic diagram of this subassembly, refer to figure 6-18. Individual functional schematic diagrams of the circuit sections are as follows:

| *Figure* | *Circuit* |
|---|---|
| 5-27 | AGC amplifier |
| 5-28 | 80 kc IF amplifier |
| 5-29 | RF bandpass selector |
| 5-30 | Detector, automatic noise limiter, audio silencer, and audio amplifier |
| 5-31 | Beat-frequency oscillator (BFO) |
| 5-32 | Output limiter and audio amplifier |

*b.* ACCESS.— The AM detector-amplifier is located in the upper demodulator deck. Figure 5-33 shows the location of parts and figure 5-34 the location of test points.

*c.* PRELIMINARY CHECK.— Before trouble-shooting the AM detector-amplifier, make a preliminary inspection with the power off and with emphasis on the following:

(1) Seating of tubes V1601 through V1611 in their sockets

(2) Cable connections at J1601 and TB1601

(3) All soldered connections at chassis feed-through terminals

(4) Normal mechanical function of the following demodulator panel controls:

(*a*) R.F. SELECTIVITY B.W.-KCS.

(*b*) A.M.-A.G.C. TIME CONSTANT

(*c*) B.F.O.

(*d*) A.M./A.F. LEVEL

(*e*) SILENCER

(*f*) O.L. THRES.

(*g*) A.F. LEVEL LINE A.

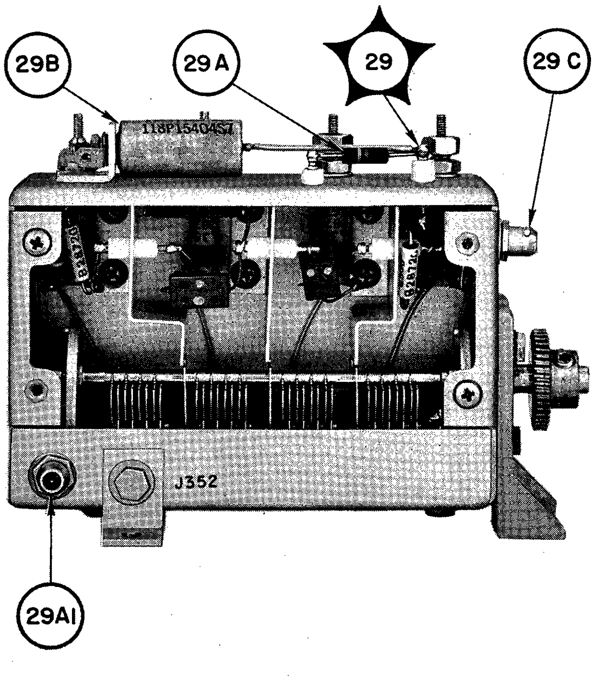

*Figure 5-16. Tunable IF Filter, Location of Test Points*

## TABLE 5-8. INJECTION IF AMPLIFIER, TROUBLE-SHOOTING CHART

| STEP | TEST POINT | PRELIMINARY ACTION | NORMAL INDICATION | NEXT STEP |
|---|---|---|---|---|
| 1 | 30<br>Figs.<br>5-18<br>5-19<br>5-20<br>5-21<br>5-22<br>5-23<br>Table<br>6-6 | Turn receiver power on. Connect multimeter, on 200 vdc range, between chassis feed-through capacitor C533 and chassis.<br>All voltage tolerances in this table ±20%. | C533: +160 vdc | If there is no reading, perform step 4 in table 5-5. Check C533.<br>WARNING<br>Turn off power before making ohmmeter measurements.<br>If reading is normal or low, proceed to step 2. |
| 2 | 30A | Connect multimeter to C528 at junction of R509 and R532. Use 200 vdc range. | C528: +150 vdc | If reading is abnormal, check C528, R509, and R532. (See step 1 WARNING note.) |
| 3 | 31<br>31A<br>31B<br>31C<br>Figs.<br>5-17<br>5-18<br>5-19<br>5-20<br>5-21<br>5-22<br>5-23<br>Table<br>6-6 | Remove cables at connectors J501, J509, and J511. Connect a signal generator between J501 and chassis, adjust for a 1675 kc signal (.01 v).<br>Measure 1675 kc signal at test point TP J503 with VTVM, selecting appropriate ranges. | TP J503: .067 v rms | If no signal is present, replace V501. Check socket pin voltages, using table 6-6. If still no signal, check R503 and Z501. Instructions for replacing parts are given in par. 6-5*b*(4). |
| 4 | 32<br>32A | Connect a second signal generator to TP J510, adjust for 1455 kc output (.09 v). Measure signal at test point J504 with VTVM. | TP J504: .054 v rms (First generator must be connected to J501, see step 3) | If no signal is present, replace V507. Check the socket pin voltages. Check T503. |
| 5 | 33<br>33A | Measure signal at test point J505 with VTVM. | TP J505: v rms (First generator must be connected to J501, see step 3) | If no signal is present, replace V502. Check socket pin voltages. Check FL502. |

## TABLE 5-8. INJECTION IF AMPLIFIER, TROUBLE-SHOOTING CHART (cont)

| STEP | TEST POINT | PRELIMINARY ACTION | NORMAL INDICATION | NEXT STEP |
|---|---|---|---|---|
| 6 | 34 | Remove signal generator from TP J510 and connect it to J511. Set for 140 kc output (.05 v). Measure 140 kc signal at TP J506 with VTVM. | TP J506: .85 v rms | If there is no signal, perform step 7. |
| 7 | 33<br>38<br>34A | Remove signal generator from J501 and connect it to TP J505, adjust for a 220 kc .04 v signal. Short pins 5 and 6 of V503. | J507: .08 v rms (Pins 5 and 6 V503 shorted) | If no signal is present, check V503 and V508. Check socket pin voltages using table 6-6. Disconnect both signal generators, remove short at V503. |

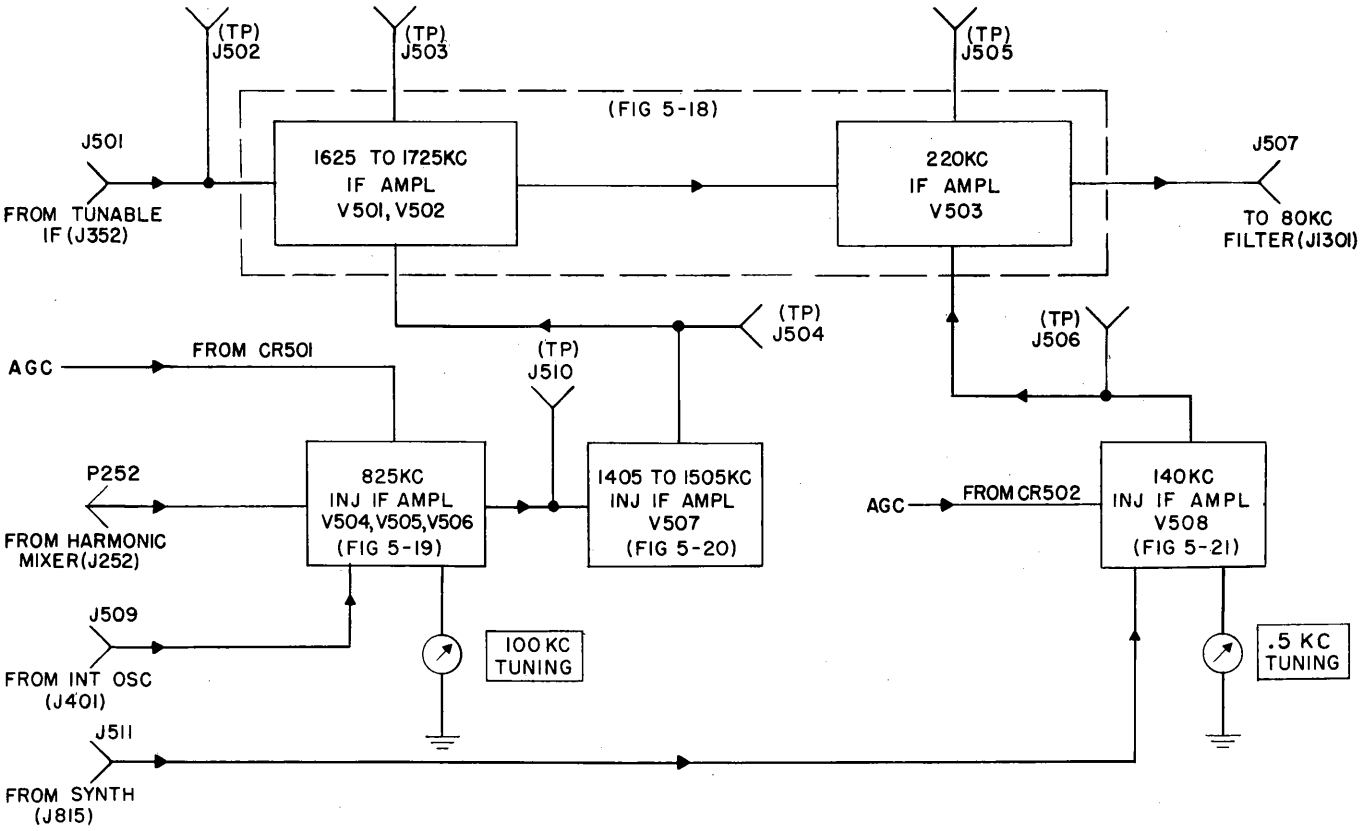

*Figure 5-17. Injection IF Amplifier, Functional Block Diagram*

## TABLE 5-8. INJECTION IF AMPLIFIER, TROUBLE-SHOOTING CHART (cont)

| STEP | TEST POINT | PRELIMINARY ACTION | NORMAL INDICATION | NEXT STEP |
|---|---|---|---|---|
| 8 | 35<br>35A<br>Figs.<br>5-17<br>5-18<br>5-19<br>5-20<br>5-21<br>5-22<br>5-23 | Connect a signal generator to P252, adjust for an 825 kc output signal (.015 v). Measure signal at terminal G of FL504. | Terminal G of FL504: .001 v rms | If no signal is present, replace V504. Check socket pin voltages using table 6-6. Check T501 and FL504. |
| 9 | 37B<br>35A<br>Fig.<br>5-19<br>Table<br>6-6 | Measure signal at pin 7 of V506 with VTVM. (Input signal the same as in step 8.) | Pin 7 of V506: .16 v rms | If no signal is present, check V505. Check both socket pin voltages using table 6-6. Check T501, FL504, and T502. |
| 10 | 36<br>37<br>37A<br>37B<br>Fig.<br>5-19<br>Table<br>6-6 | Connect a second signal generator to J509, adjust for a 630 kc output (0.1 v). Measure signal at test point J510 with VTVM. (First generator adjusted as in step 8.) | TP J510: .09 v rms | If no signal is present, replace V506 with new tube, check socket pin voltages using table 6-6, check FL505. |
| 11 | 35B<br>35B1 | Check AGC voltage at pin 1 of V505. Connect VTVM to pin 1 of V505. (Input signals from the generators the same as in step 10.) | Pin 1 V505: —6 vdc | If voltage is abnormal, check AGC diode CR501 and parts R516, R519, R522, R525, C523, C519, and C513. |

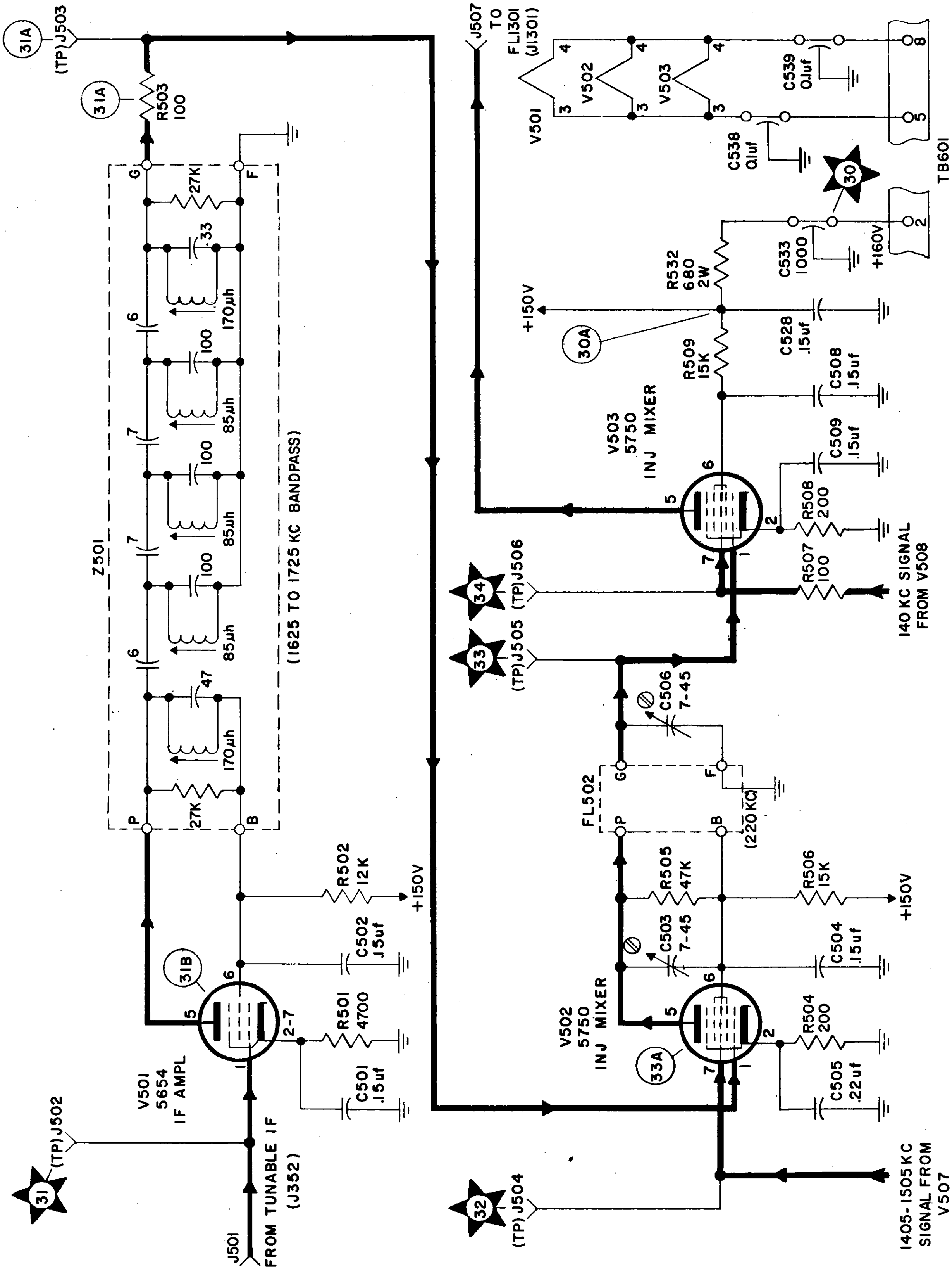

*Figure 5–18. Injection IF Amplifier, 1625 Kc to 1725 Kc and 220 Kc IF Amplifiers, Functional Schematic Diagram*

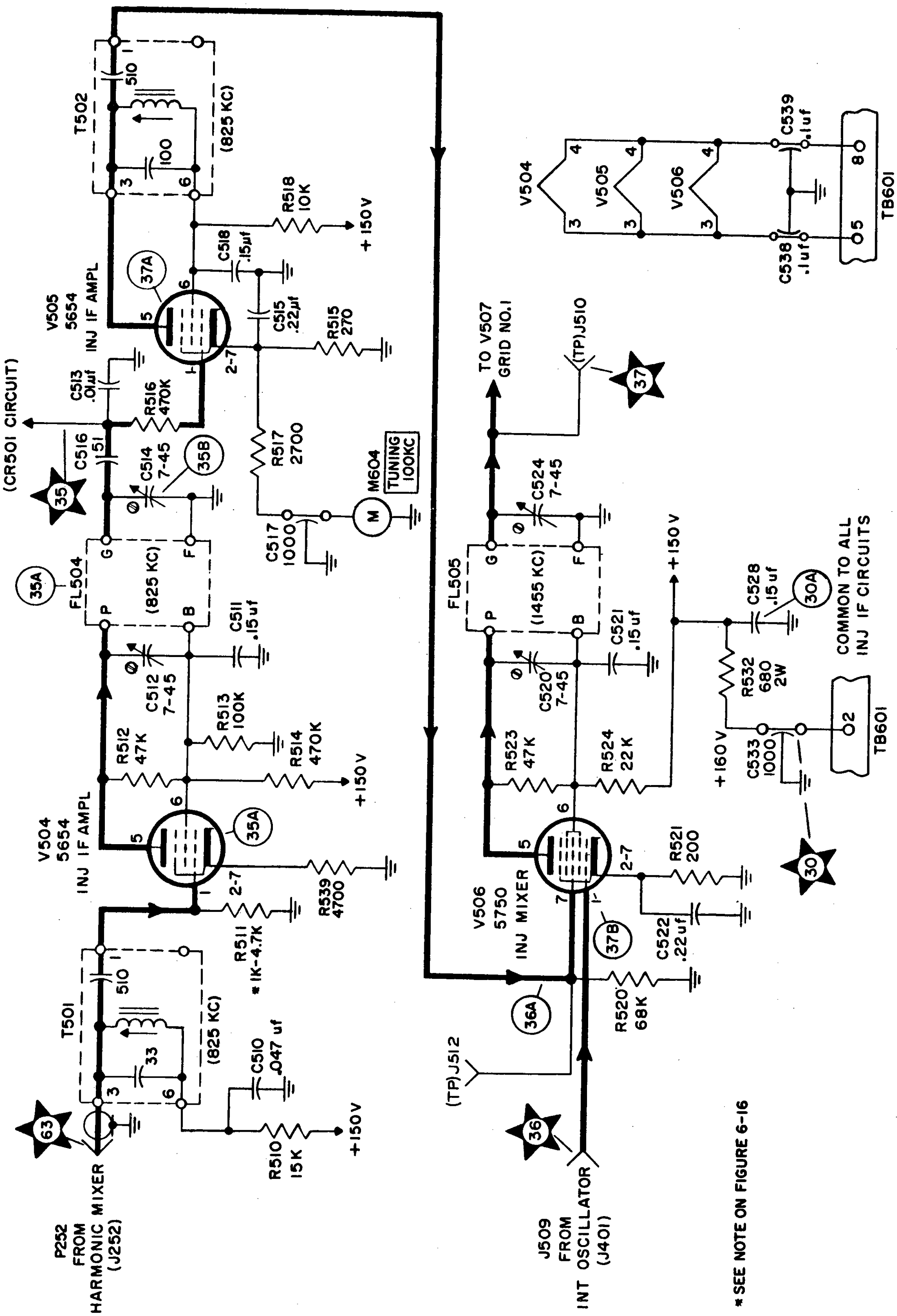

* SEE NOTE ON FIGURE 6-16

*Figure 5—19. Injection IF Amplifier, 825 Kc Injection Amplifier, Functional Schematic Diagram*

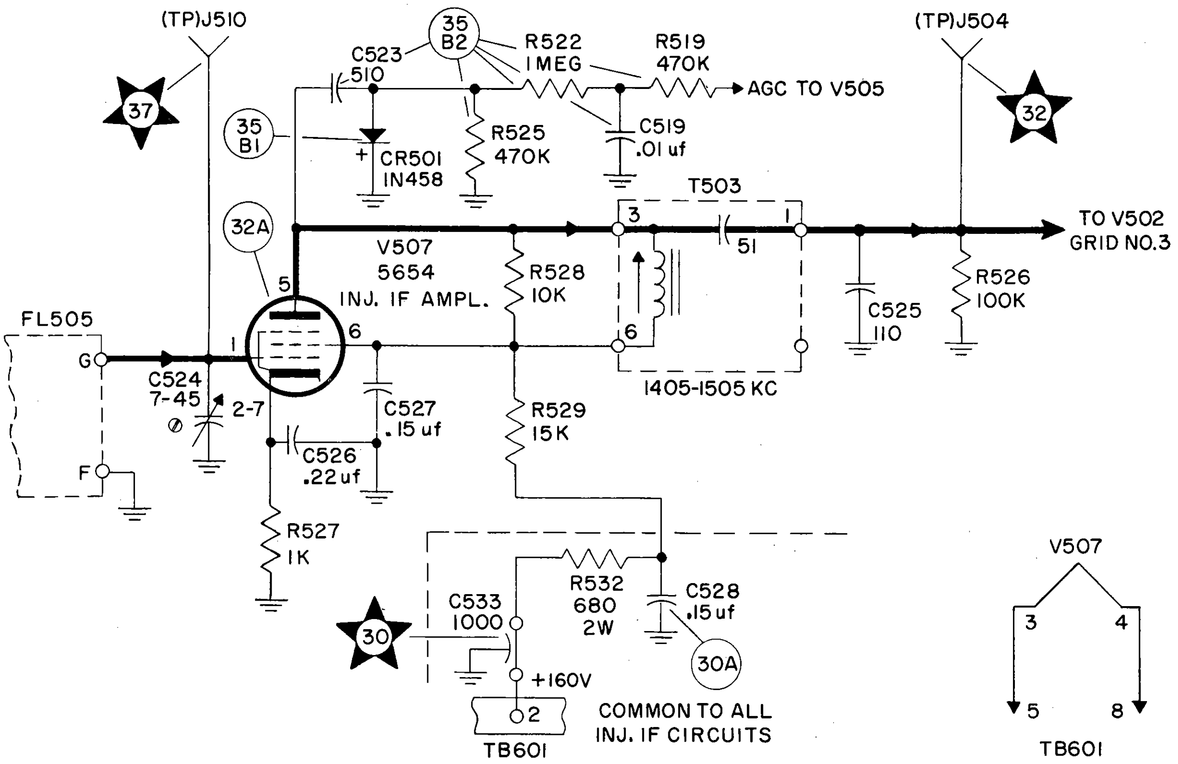

*Figure 5-20. Injection IF Amplifier, 1405 Kc to 1505 Kc Injection Amplifier, Functional Schematic Diagram*

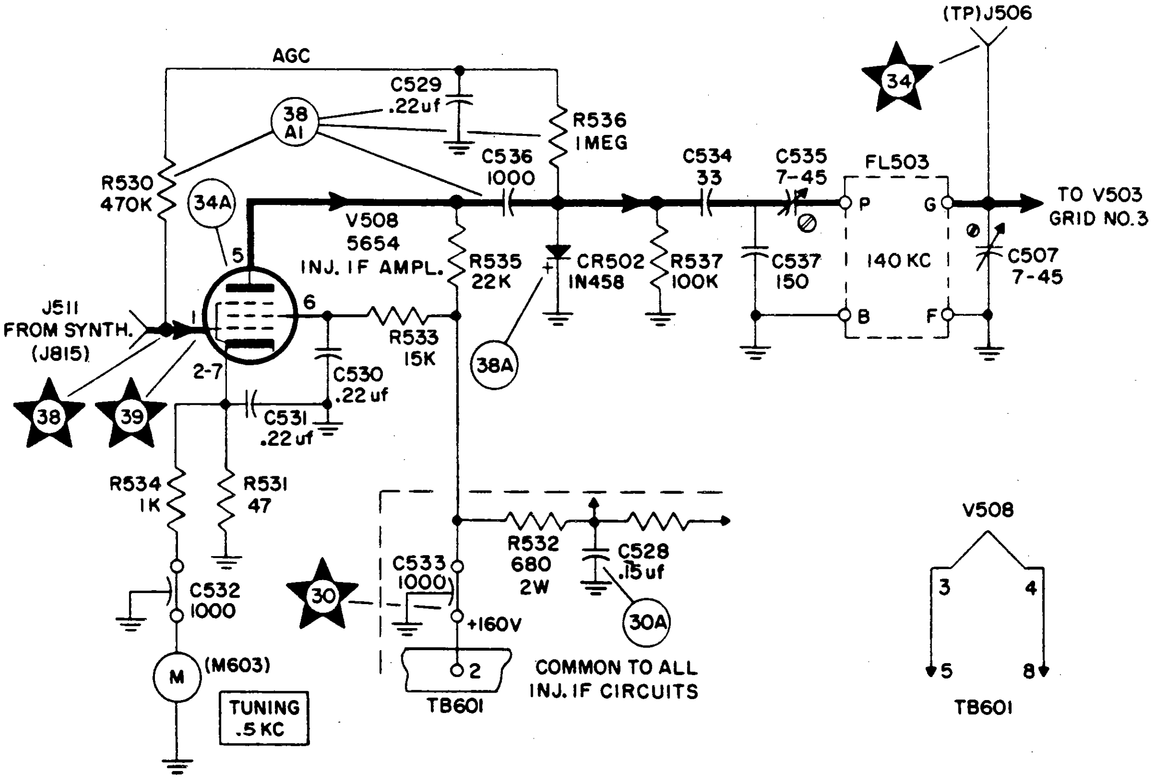

*Figure 5-21. Injection IF Amplifier, 140 Kc Injection Amplifier, Functional Schematic Diagram*

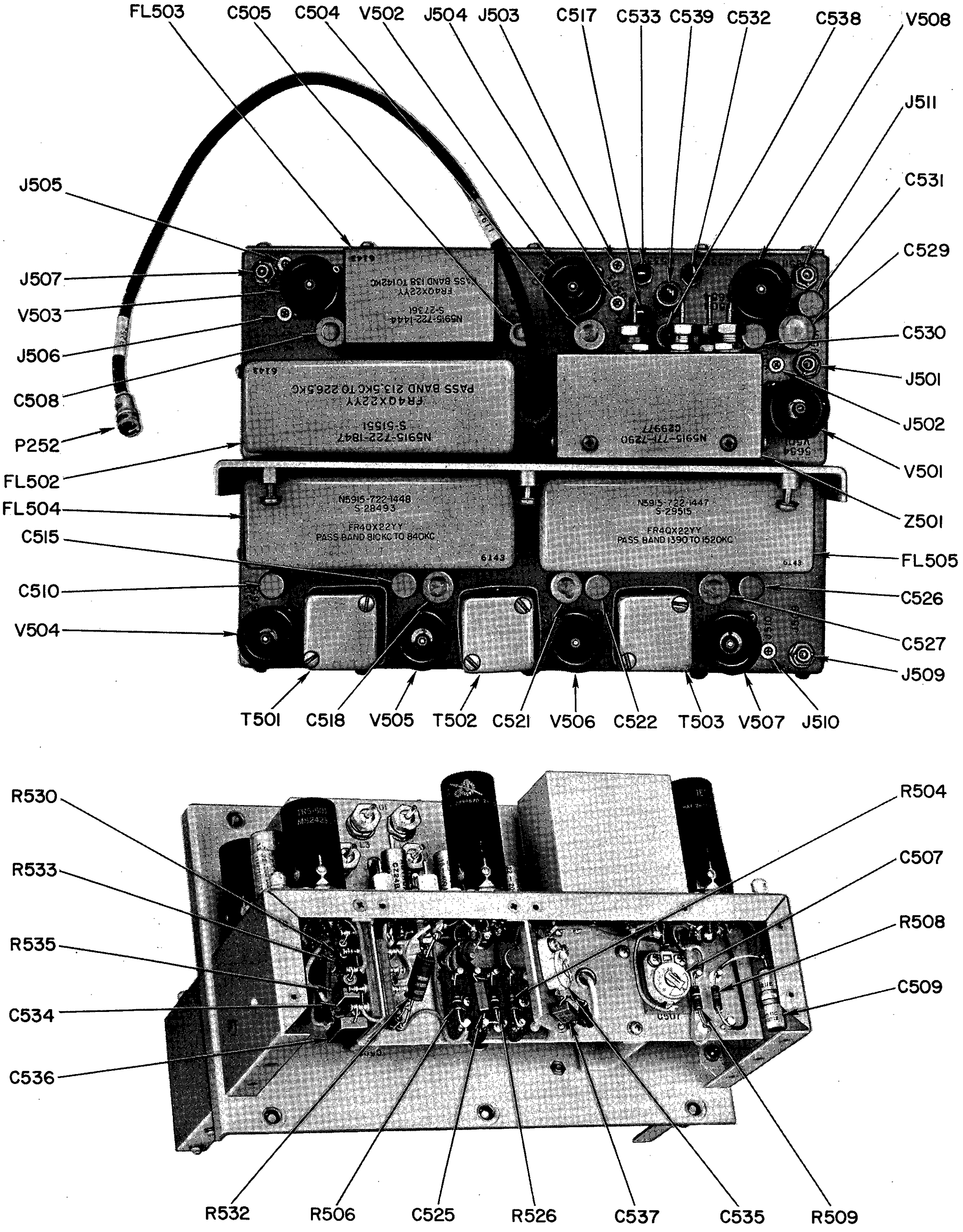

*Figure 5—22. Injection Amplifier, Location of Parts*
*(Sheet 1 of 2)*

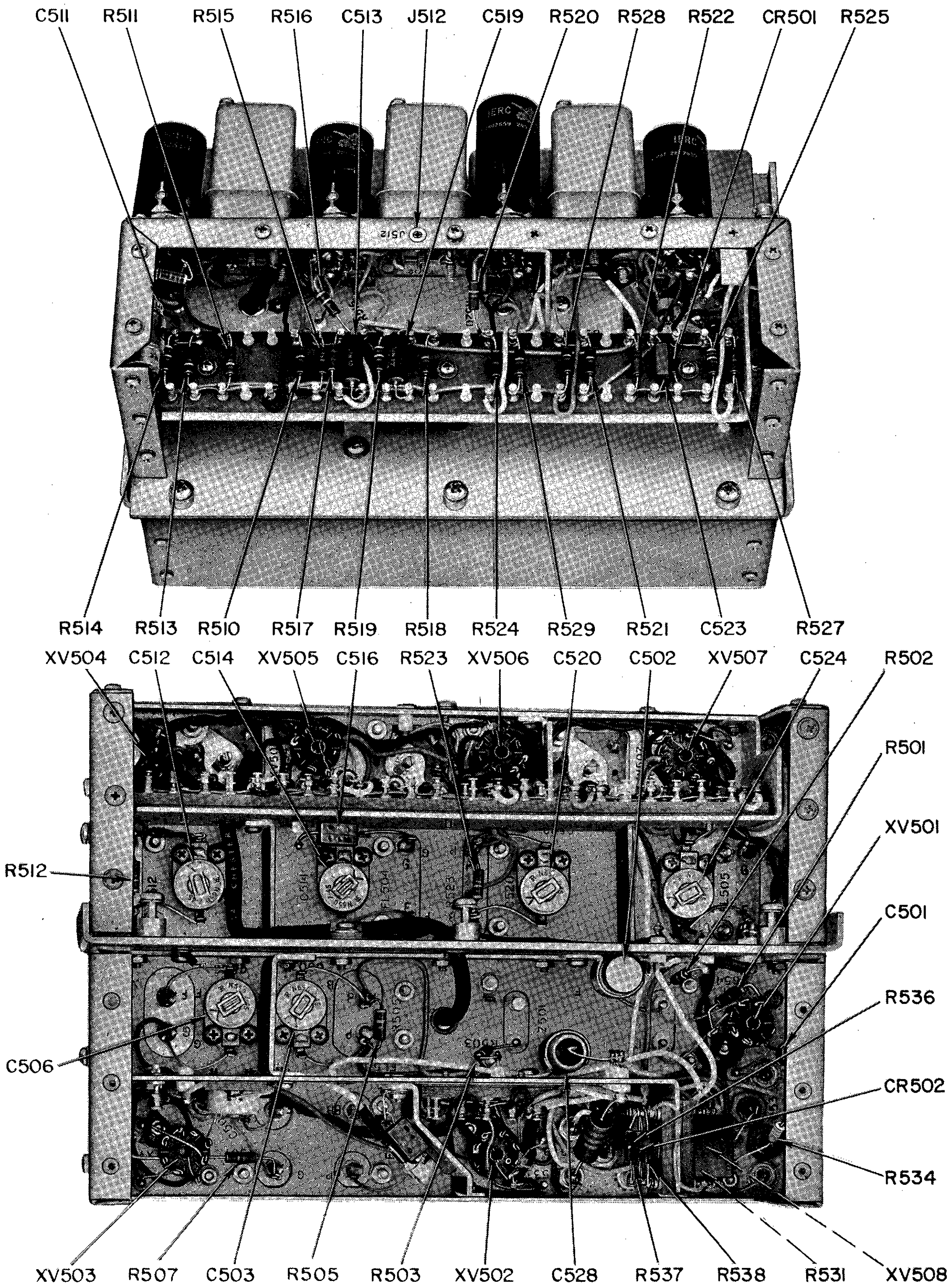

*Figure 5—22. Injection Amplifier, Location of Parts (Sheet 2 of 2)*

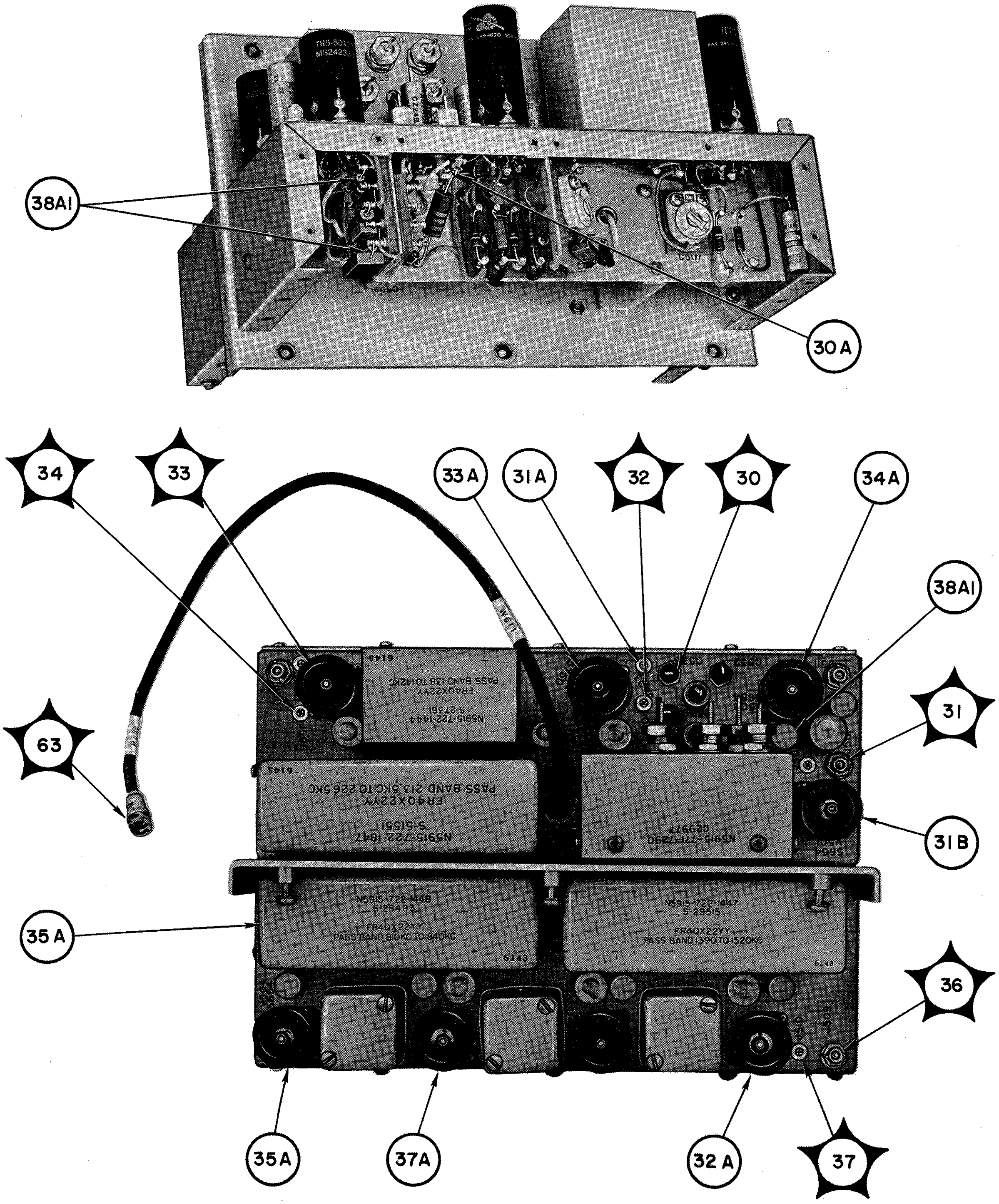

*Figure 5–23. Injection IF Amplifier, Location of Test Points (Sheet 1 of 2)*

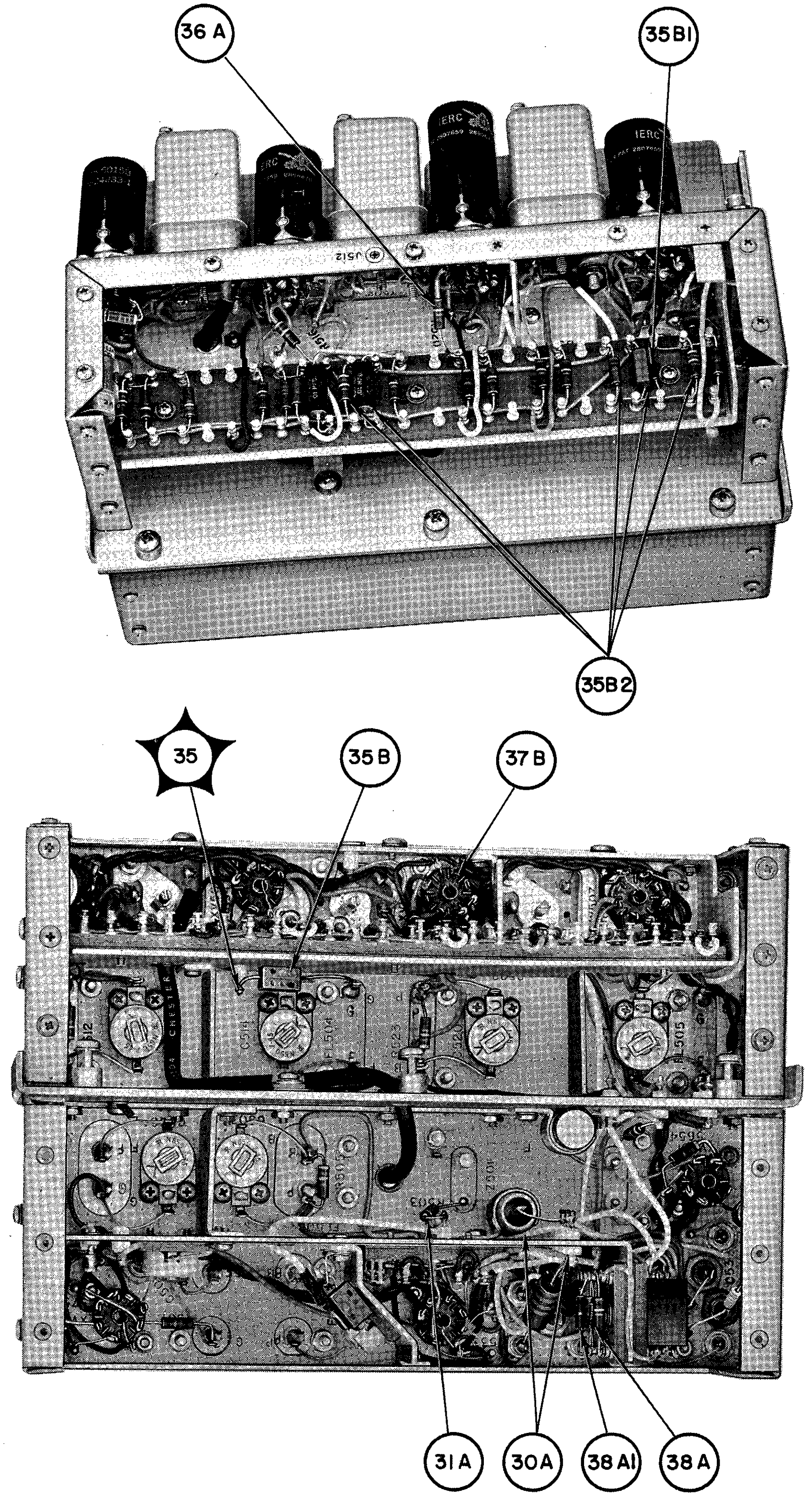

*Figure 5—23. Injection IF Amplifier, Location of Test Points (Sheet 2 of 2)*

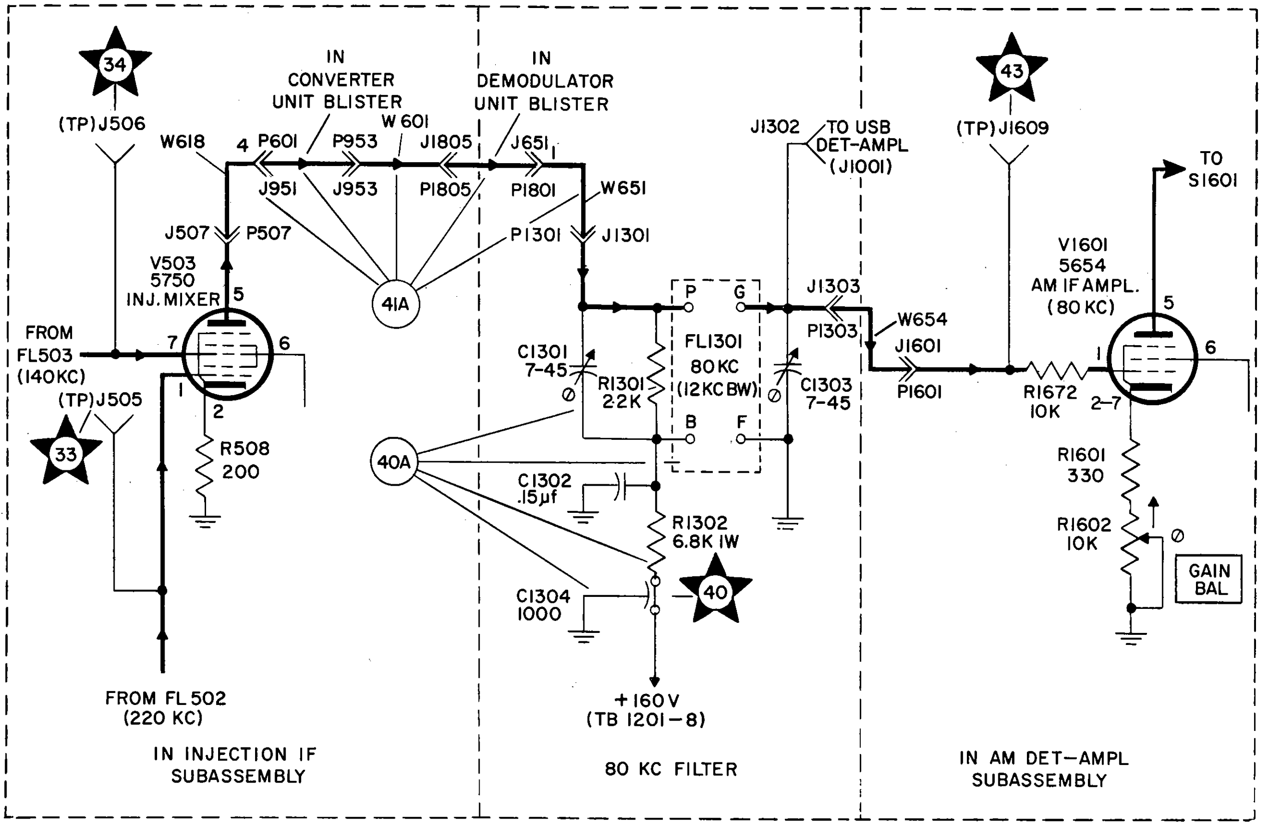

*Figure 5-24. 80 Kc Filter, Functional Schematic Diagram*

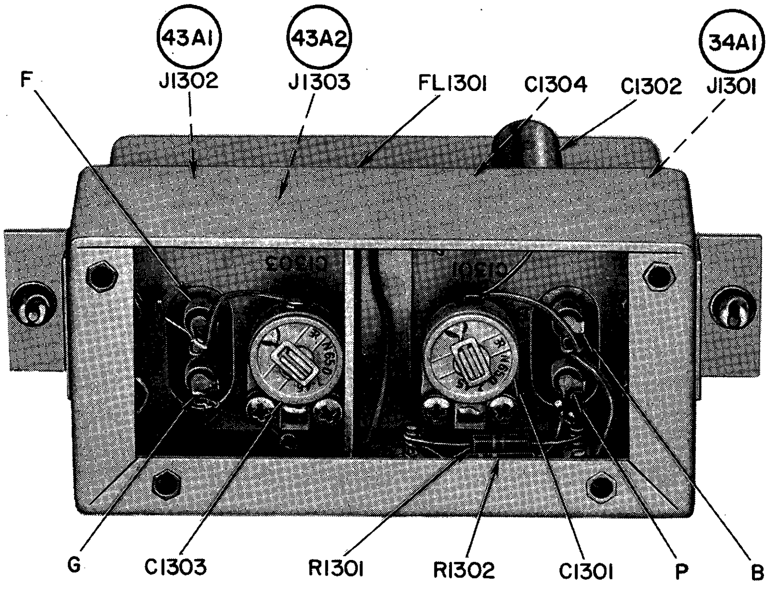

*Figure 5-25. 80 Kc Filter, Location of Parts and Test Points*

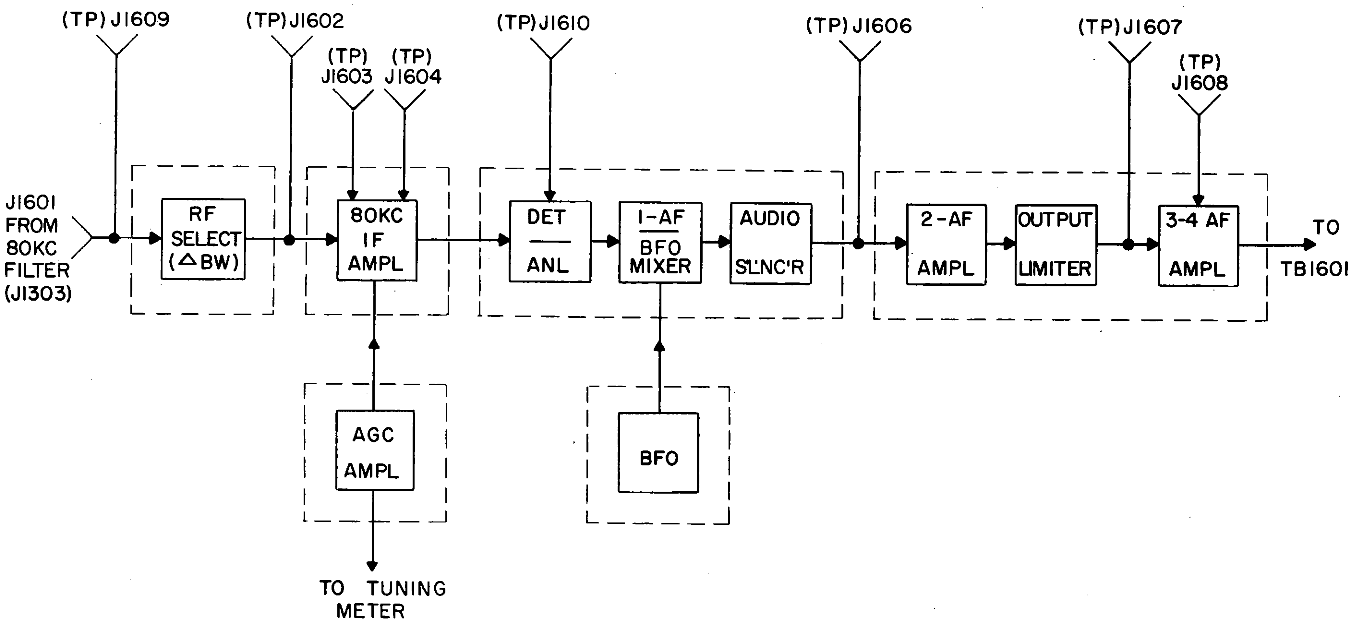

*Figure 5-26. AM Detector-Amplifier, Functional Block Diagram*

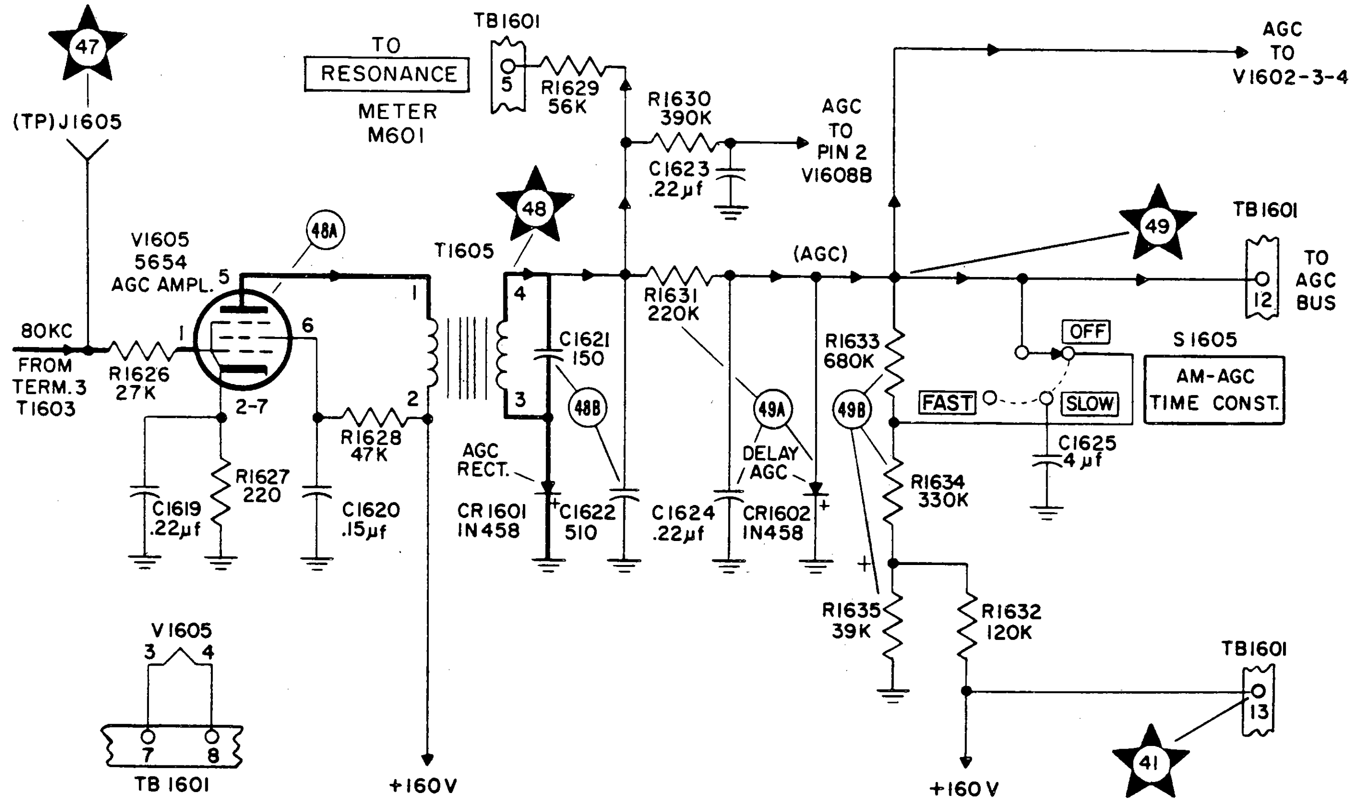

*Figure 5-27. AM Detector-Amplifier, AGC Amplifier, Functional Schematic Diagram*

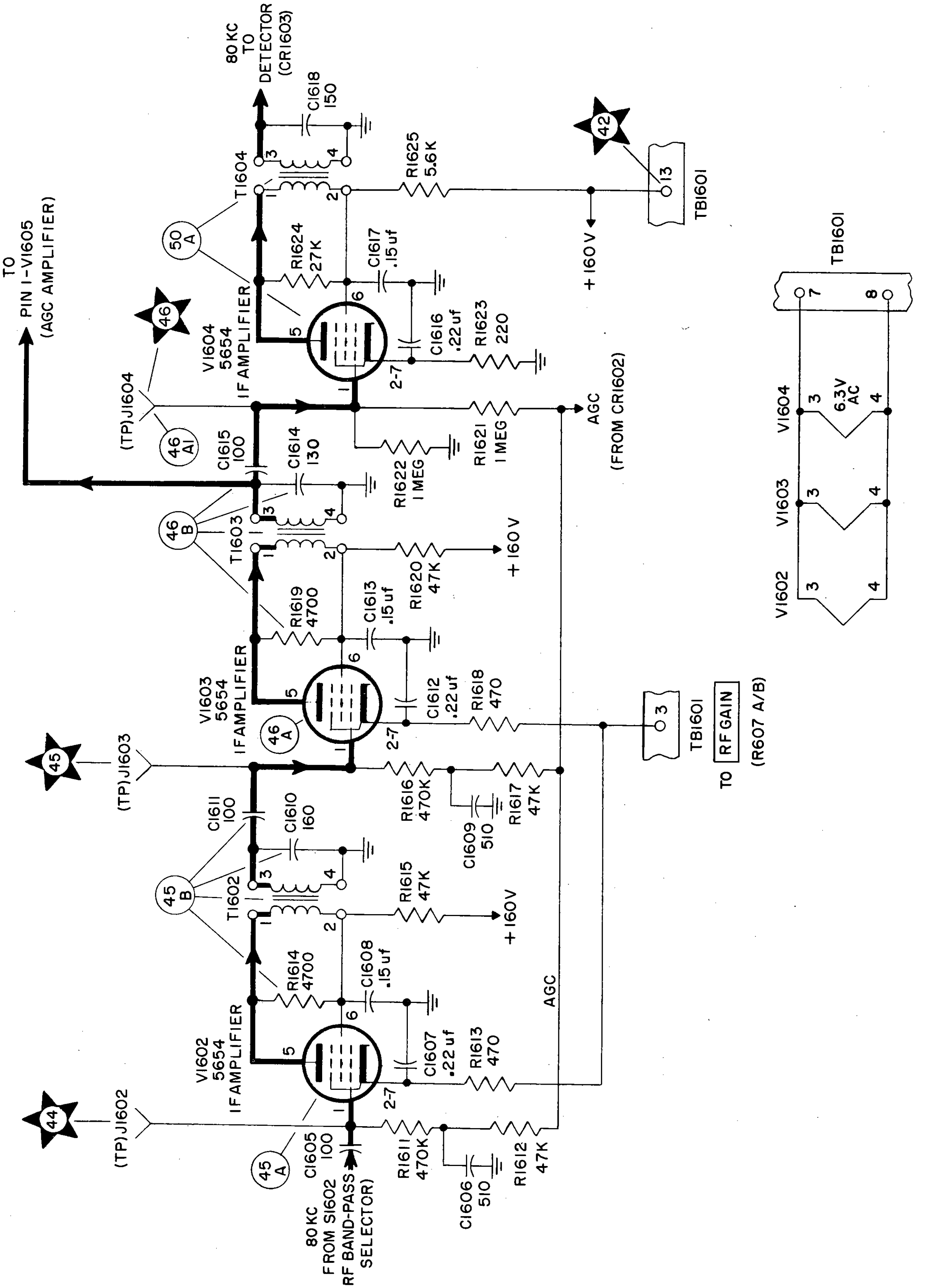

*Figure 5—28. AM Detector-Amplifier, 80 Kc IF Amplifier, Functional Schematic Diagram*

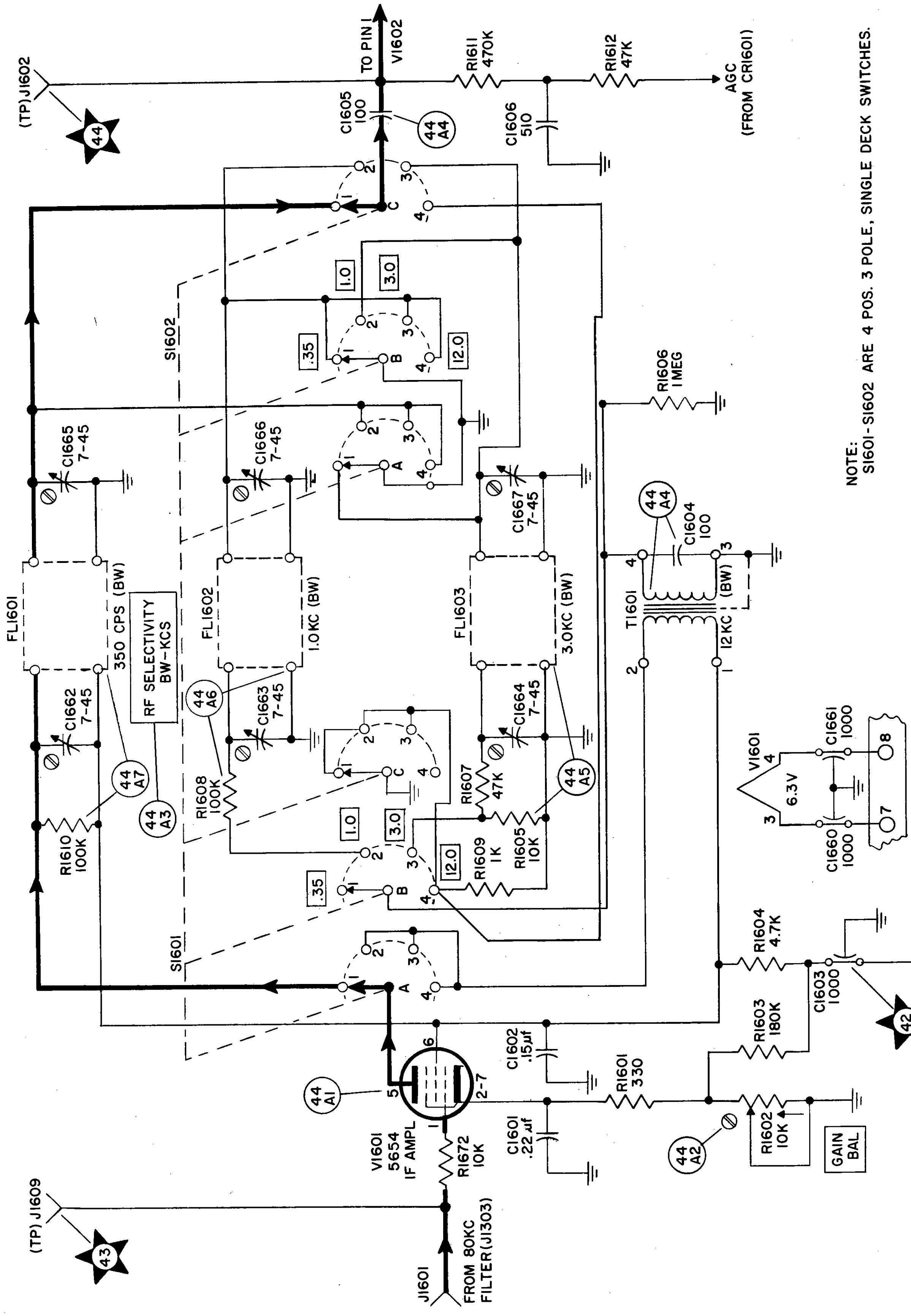

NOTE:
S1601-S1602 ARE 4 POS. 3 POLE, SINGLE DECK SWITCHES.

**Figure 5—29. AM Detector-Amplifier, RF Bandpass Selector, Functional Schematic Diagram**

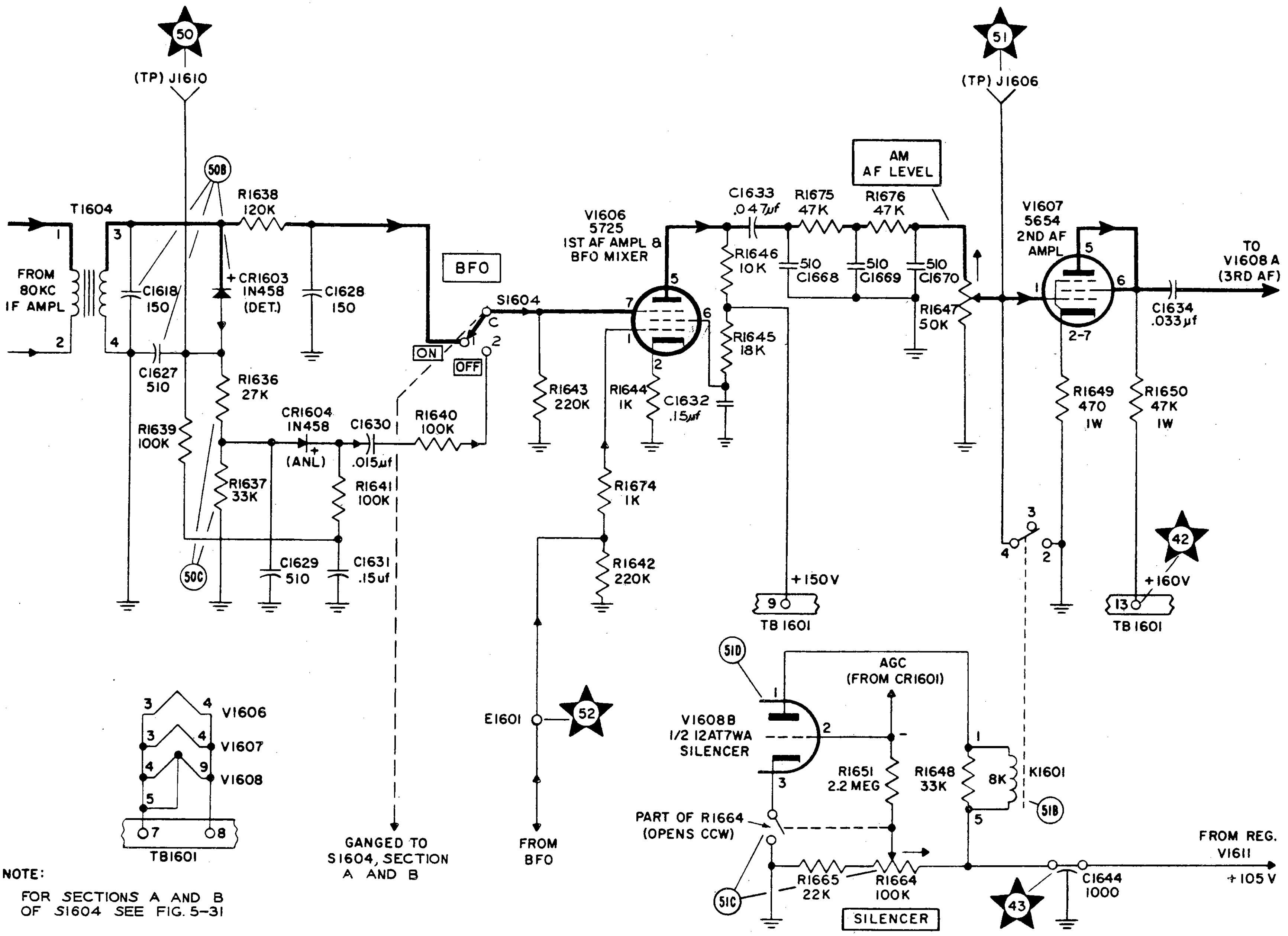

NOTE:
FOR SECTIONS A AND B OF S1604 SEE FIG. 5–31

Figure 5–30. AM Detector-Amplifier, Detector, Automatic Noise Limiter, Audio Silencer, and Audio Amplifier, Functional Schematic Diagram

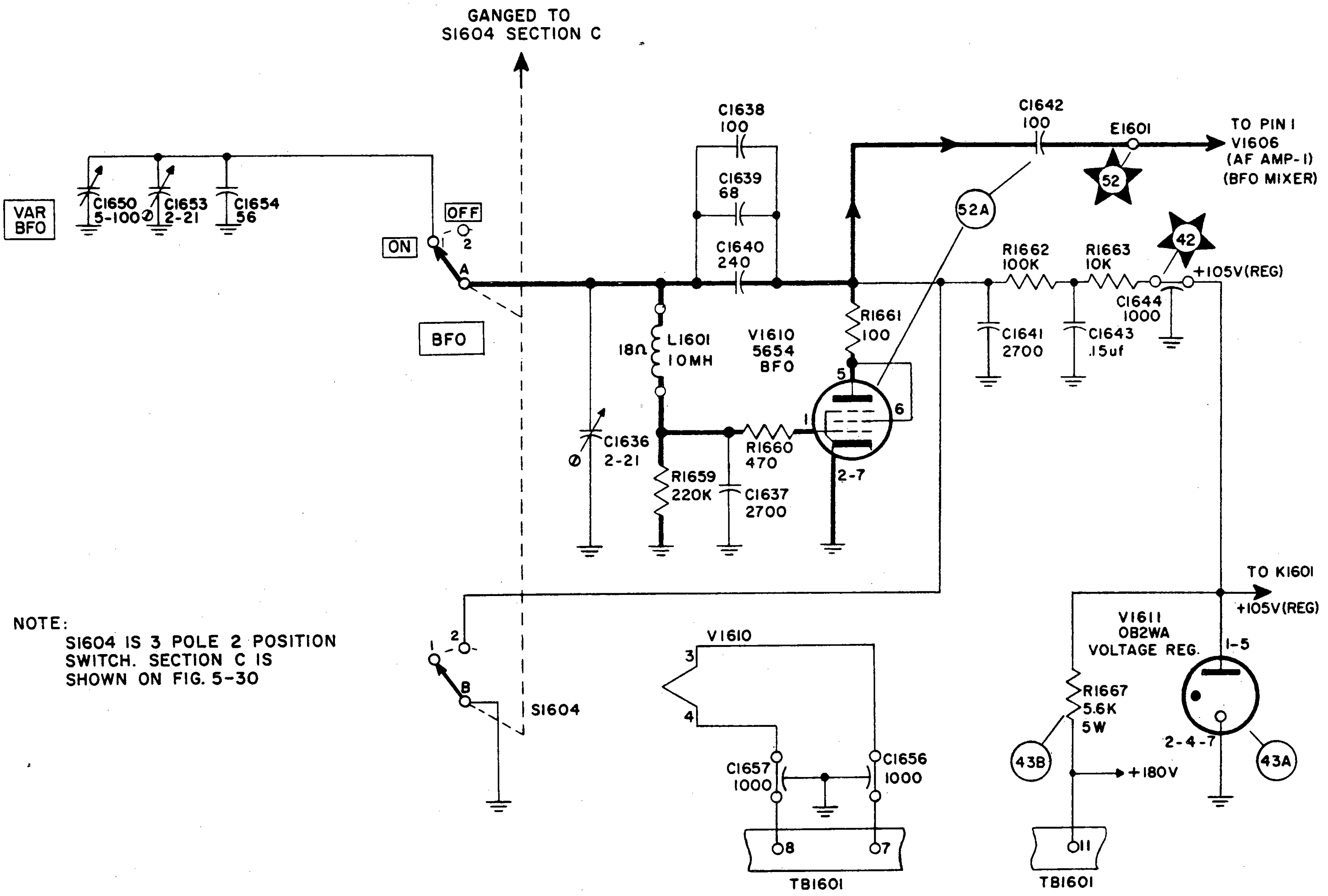

NOTE:
S1604 IS 3 POLE 2 POSITION SWITCH. SECTION C IS SHOWN ON FIG. 5-30

*Figure 5—31. AM Detector-Amplifier, BFO, Functional Schematic Diagram*

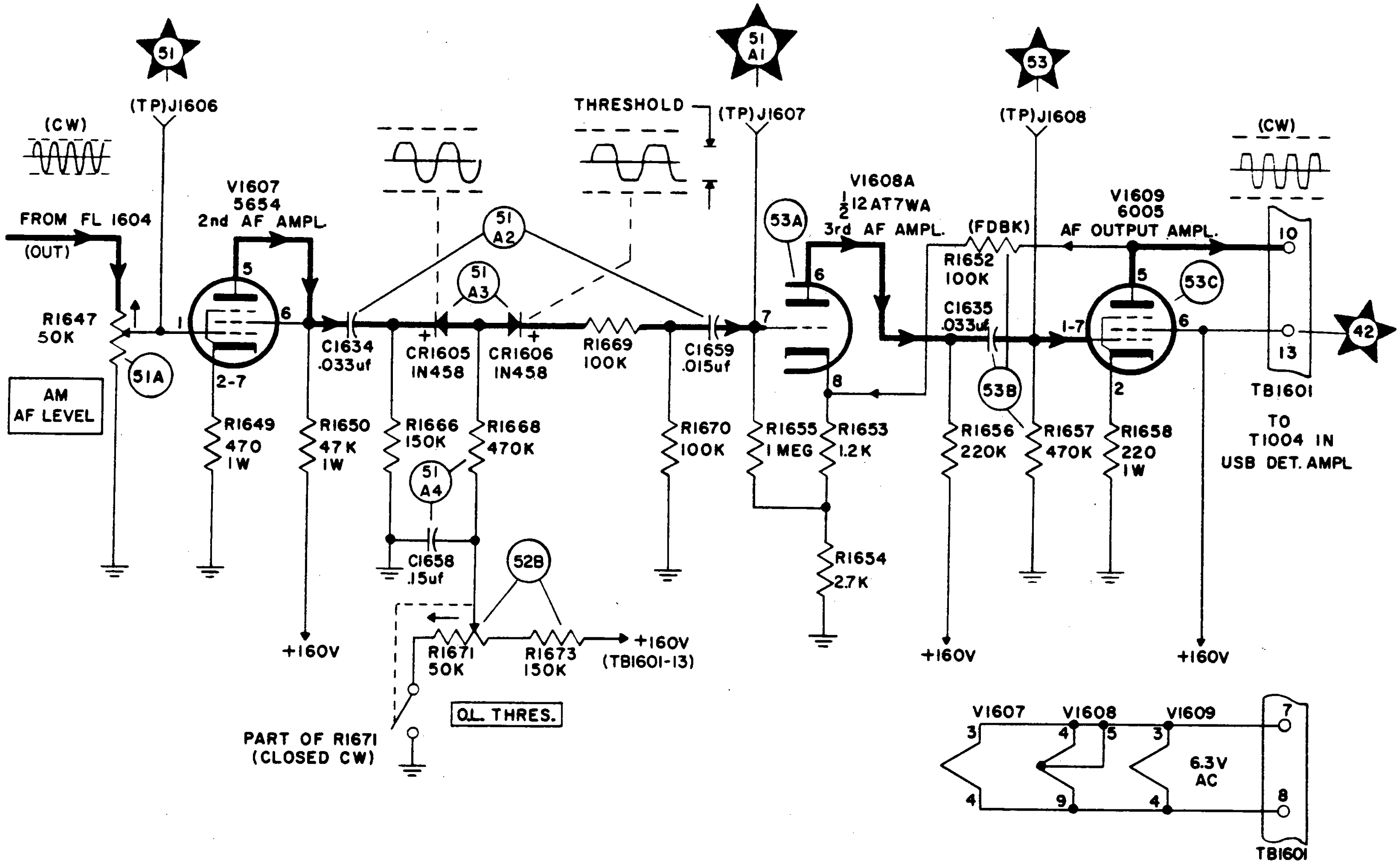

Figure 5—32. AM Detector-Amplifier, Output Limiter and Audio Amplifier, Functional Schematic Diagram

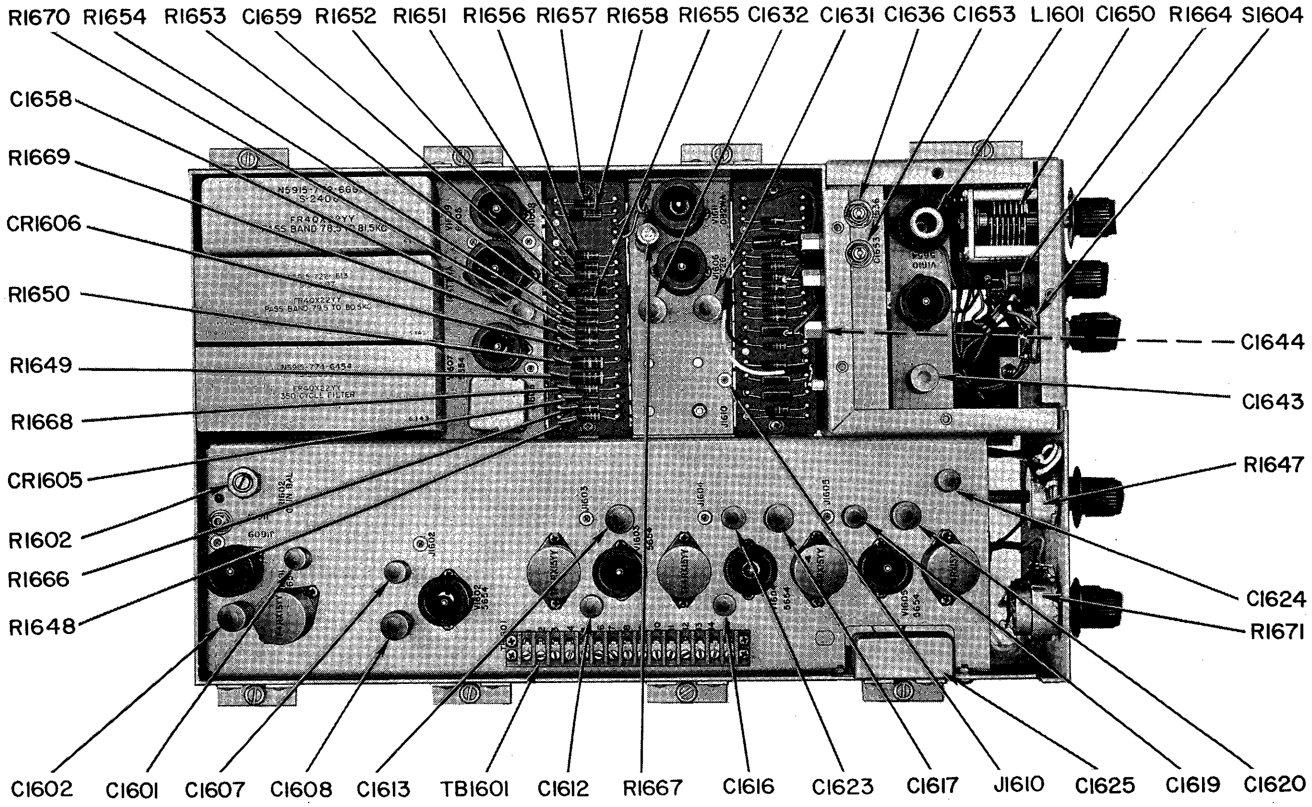

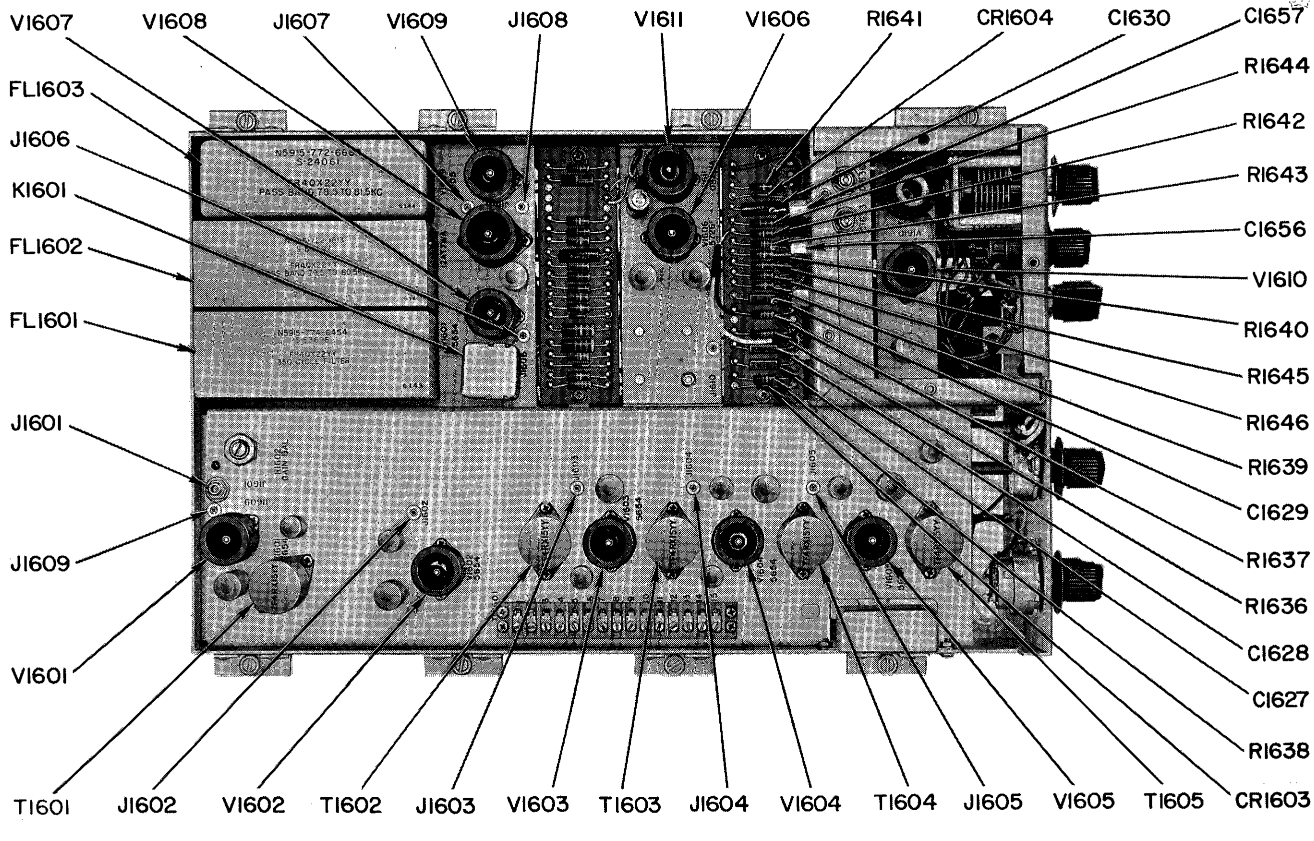

*Figure 5—33. AM Detector-Amplifier, Location of Parts (Sheet 1 of 2)*

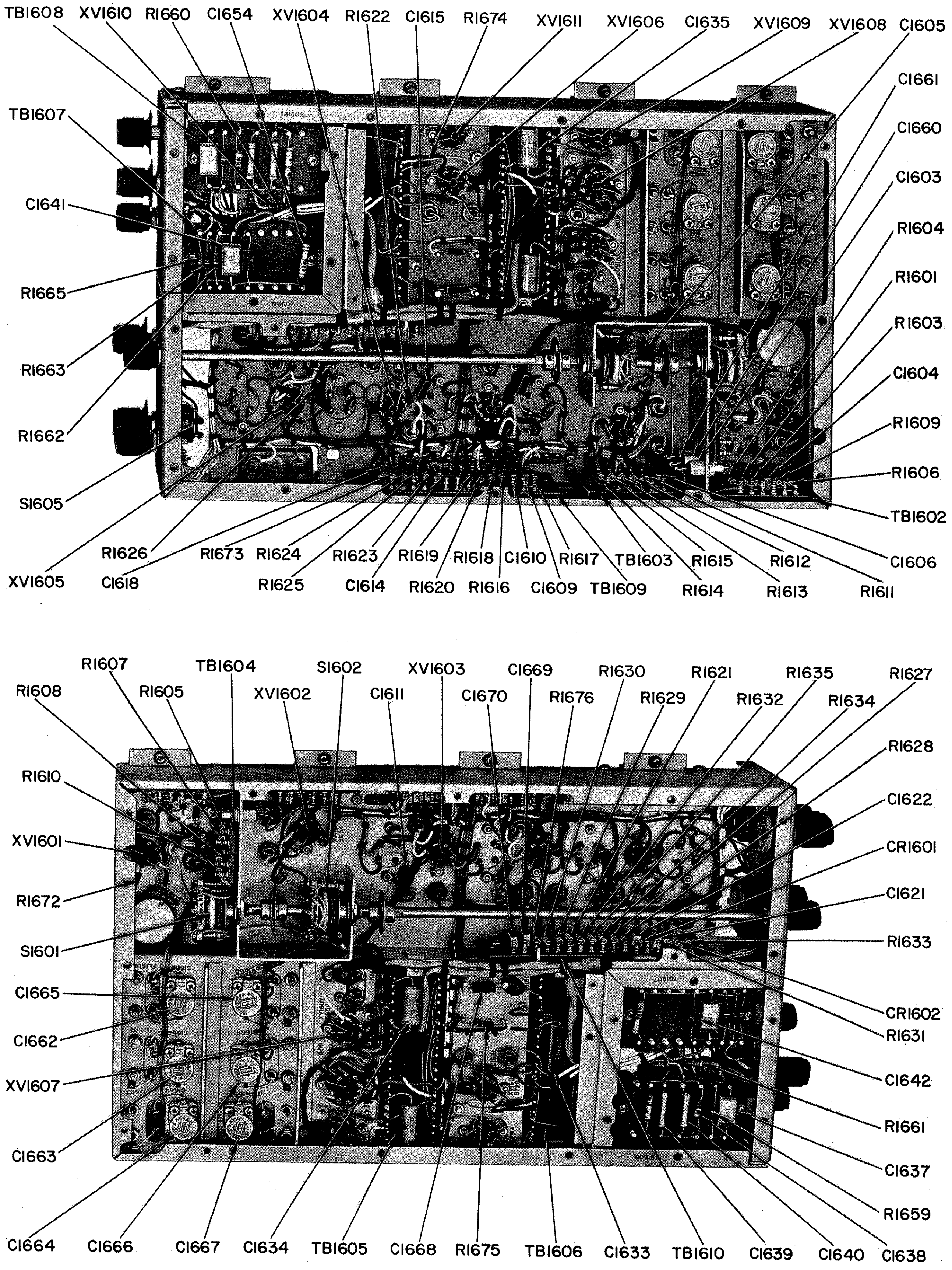

*Figure 5—33. AM Detector-Amplifier, Location of Parts*
*(Sheet 2 of 2)*

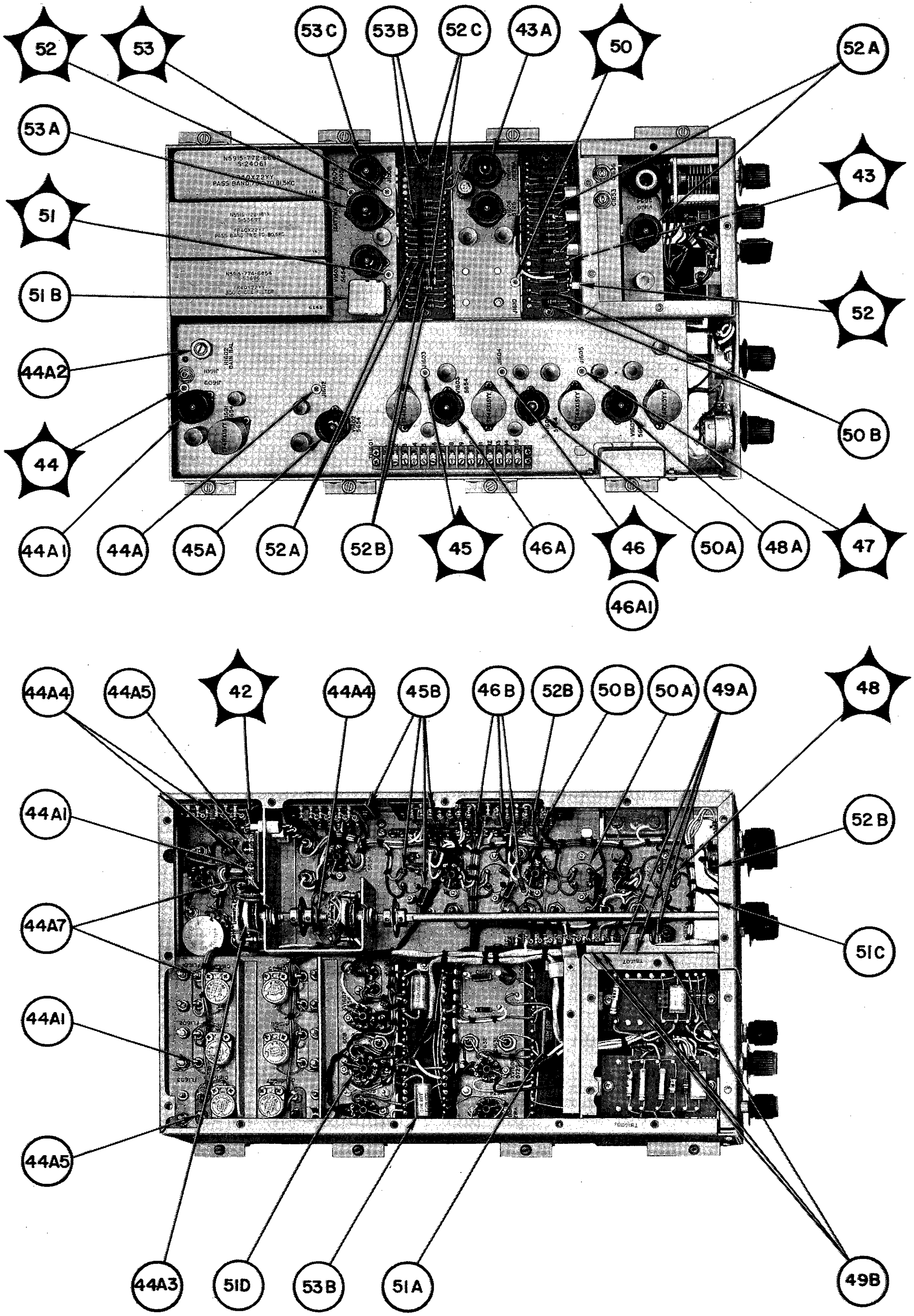

*Figure 5—34. AM Detector-Amplifier, Location of Test Points*

## WARNING

Potentials as high as 210 volts rms are present in the power supply circuits. Avoid contact.

*d.* TEST EQUIPMENT AND SPECIAL TOOLS.— Use Multimeter AN/PSM-4B, VTVM ME-30/U, VTVM ME-6D/U, Signal Generator AN/URM-25D, and Oscilloscope OS-8C/U. No special tools are required.

*e.* CONTROL SETTINGS.— Place the panel controls in the positions listed in table 5-2. Exceptions will be made during the trouble-shooting procedure.

*f.* AM DETECTOR-AMPLIFIER TROUBLE-SHOOTING CHART.— Table 5-9 is the trouble-shooting chart for the AM detector-amplifier. Perform the steps in the order given. Compare the results with those in the NORMAL INDICATION column and follow the instructions given in the NEXT STEP column. Voltage and resistance measurements are given in table 6-8.

## 5-14. HIGH-FREQUENCY OSCILLATOR.

*a.* FUNCTION.— The high-frequency (HF) oscillator (V301) generates a local RF signal, which is applied to the preselector mixer (V151) to heterodyne the received signal to the first IF frequency of 1,625 kc to 1,725 kc and which is applied also to the harmonic amplifier mixer (V251) to generate the 825 kc injection signal. Faulty operation of the HF oscillator will affect the output of both the preselector mixer and the injection signal, disabling the receiver. Figure 5-35 is a functional schematic diagram of the HF oscillator.

### TABLE 5-9. AM DETECTOR-AMPLIFIER, TROUBLE-SHOOTING CHART

| STEP | TEST POINT | PRELIMINARY ACTION | NORMAL INDICATION | NEXT STEP |
|---|---|---|---|---|
| 1 | 41<br>42 | Measure dc supply voltage from TB1601, pin 13 to chassis. Use Multimeter selecting the 200 vdc range. Tolerance ±20%. | TB1601-13: +170 vdc | If indication is abnormal, perform steps in table 5-6. Check C1603. Check for shorts in the plate supply line.<br>WARNING<br>Turn off power before making ohmmeter measurements. |
| | Figs.<br>5-27<br>5-28<br>5-29<br>5-30<br>5-31<br>5-32<br>5-33<br>5-34<br>Table<br>6-8 | | C1644: +105 vdc ±5% tol. | If indication is abnormal, replace V1611; if still abnormal, perform steps in table 5-6. Check R1644 and R1667. |
| | 43B | Measure dc supply voltage at TB1601-11. | TB1601-11: +180 vdc | If indication is abnormal, refer to table 5-6. |
| 2 | 43<br>45 | Remove cable W654 and connect signal generator to J1601. Adjust for an 80 kc (30 uv) unmodulated output. Place the RF GAIN and AM AF LEVEL controls clockwise. | TP J1603<br>12:0: .003 v rms<br>3.0: .005 v rms<br>1.0: .004 v rms<br>.350: .015 v rms | If indication is abnormal, check V1601 and V1602. Check socket pin voltages with table 6-8. Check adjustment of R1602 GAIN BAL control. (See par. 6-4*d*) for adjustment information.) Check T1601, T1602, FL1601, FL1602, FL1603, and S1601-1602. |
| | Figs.<br>5-27<br>5-28 | Measure signals at TP J1603 for each position of the RF SELECTIVITY BW KC control with VTVM ME-30/U. Tolerance 10%. | | Return RF SELECTIVITY BW-KCS control to the 12.0 position.. |

## TABLE 5-9. AM DETECTOR-AMPLIFIER, TROUBLE-SHOOTING CHART (cont)

| STEP | TEST POINT | PRELIMINARY ACTION | NORMAL INDICATION | NEXT STEP |
|---|---|---|---|---|
| | 44A4<br>to<br>44A7 | | | |
| 3 | 46<br>Fig. 5-28 | With signal generator connected and adjusted as in step 2, measure signal at TP J1604, with VTVM ME-30/U. | TP J1604: .07 v rms (minimum) | If indication is abnormal, replace V1603. Check socket pin voltages. Check T1603. |
| 4 | 50<br>Fig. 5-30 | With signal generator connected as in step 2, adjust for an 80 kc, 26 uv output modulated 30% with 400 cps. Measure rectified signal at TP J1610 with a VTVM in the dc range. | TP J1610: .03 vdc (minimum) | If indication is abnormal, replace V1604. Check socket pin voltages. Check CR1603 and T1604. |
| 5 | 51<br>Figs. 5-30 5-32 | With signal generator connected and adjusted as in step 4, measure the audio signal at test points with VTVM ME-30/U. | TP J1606: .13 v rms | If indication is abnormal, replace V1606. Check socket pin voltages. Check (R1675, R1676, C1668, C1669, C1670). If still abnormal, check the silencer circuit; see step 8. |
| | 52A1 | | TP J1607: 0.9 v rms | If indication is abnormal, replace V1607. Check socket pin voltages. If still abnormal, check the output limiter circuit; see step 9. |
| | Fig. 5-32 | | TP J1608: 1.9 v rms | If indication is abnormal, replace V1608. Check socket pin voltages. |
| | 53<br>Fig. 5-32<br>53C<br>138<br>Figs. 5-77 5-79 | | J1802: 1.9 v rms LINE A (600 ohm load connected) | If indication is abnormal, replace V1609. Check socket pin voltages. |

## TABLE 5-9. AM DETECTOR-AMPLIFIER, TROUBLE-SHOOTING CHART (cont)

| STEP | TEST POINT | PRELIMINARY ACTION | NORMAL INDICATION | NEXT STEP |
|---|---|---|---|---|
| 6 | 47<br>Fig. 5-27 | To test the AGC amplifier circuit, adjust the signal generator (still connected to J1601) for an 80 kc output (30 uv), unmodulated. Measure signal at TP J1605 with VTVM ME-30/U. | TP J1605: .05 v rms (minimum) | If indication is abnormal, replace V1603. Check socket pin voltages. Check T1603. |
|  | 48<br>Fig. 5-27 | Place the AM-AGC TIME CONSTANT control in FAST position and measure AGC voltage at terminal 4 of T1605 with VTVM. | Terminal 4 of T1605: —5 vdc (minimum) | If indication is abnormal, replace V1605. Check socket pin voltages. Check T1605 and CR1601. |
|  | 49 | Measure AGC voltage on AGC buss at TB-1601 with VTVM. | TB1601 terminal 12: —5 vdc (minimum) | If indication is abnormal, check diode CR1602 and resistors R1631, R1633, R1634, and R1635. |
| 7 | 52<br>Fig. 5-31<br>52A | To test the BFO circuit place the BFO control in the on position. Measure the BFO output signal at E1601. | E1601: 0.5 v rms (minimum) | If indication is abnormal, replace V1610. Check socket pin voltages. Check V1611. Refer to par. 6-4*c* for BFO alignment instructions. |
| 8 | 51<br>Fig. 5-30<br>51A<br>to<br>51D | To test the silencer circuit connect and adjust the signal generator to J1601 as described in step 4. Measure signal at TP J1606 with VTVM ME-30/U. Turn the SILENCER control slowly clockwise until relay K1601 operates, removing signal at TP J1606. | TP J1606: .13 v rms, zero volts with SILENCER control one-half clockwise or less. | If indication is abnormal, replace V1608. Check socket pin voltages. Check K1601 and switch on R1664 (SILENCER) control. |
| 9 | Fig. 5-32<br>51A1<br>to<br>51A4 | To test the output limiter circuit connect and adjust the signal generator as described in step 4. Connect oscilloscope to TP J1607 and adjust to show 400 cps signal (sweep rate of 100/sec approx.). Slowly turn O.L. THRES. control clockwise, noting clipping of the waveform peaks. | TP J1607: Oscilloscope waveforms. Clipping of peaks equal. Clipping increases as O.L. THRES. control is rotated clockwise. | If indication is abnormal, check diodes CR1605 and CR1606. Check C1658, R1668, R1673, and R1671. |

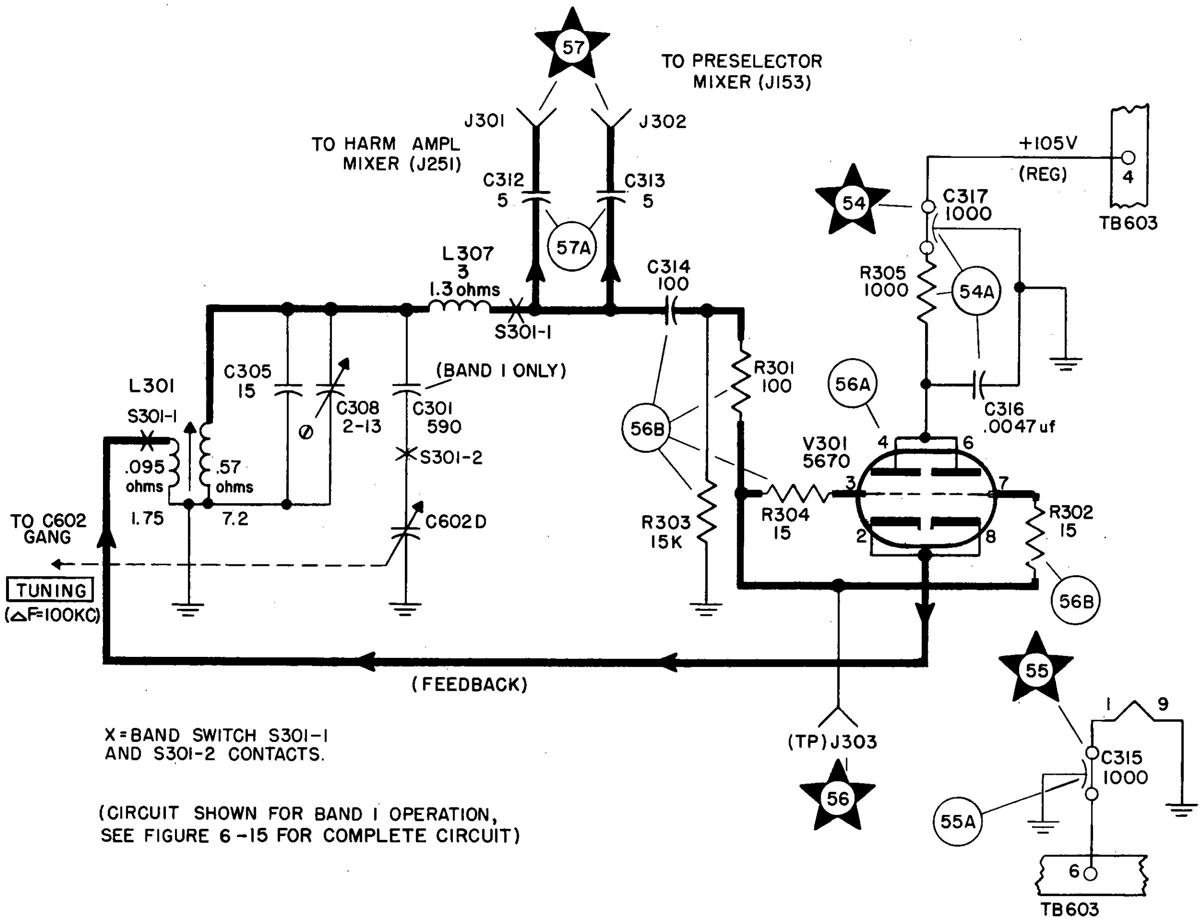

*Figure 5-35. High-Frequency Oscillator, Functional Schematic Diagram*

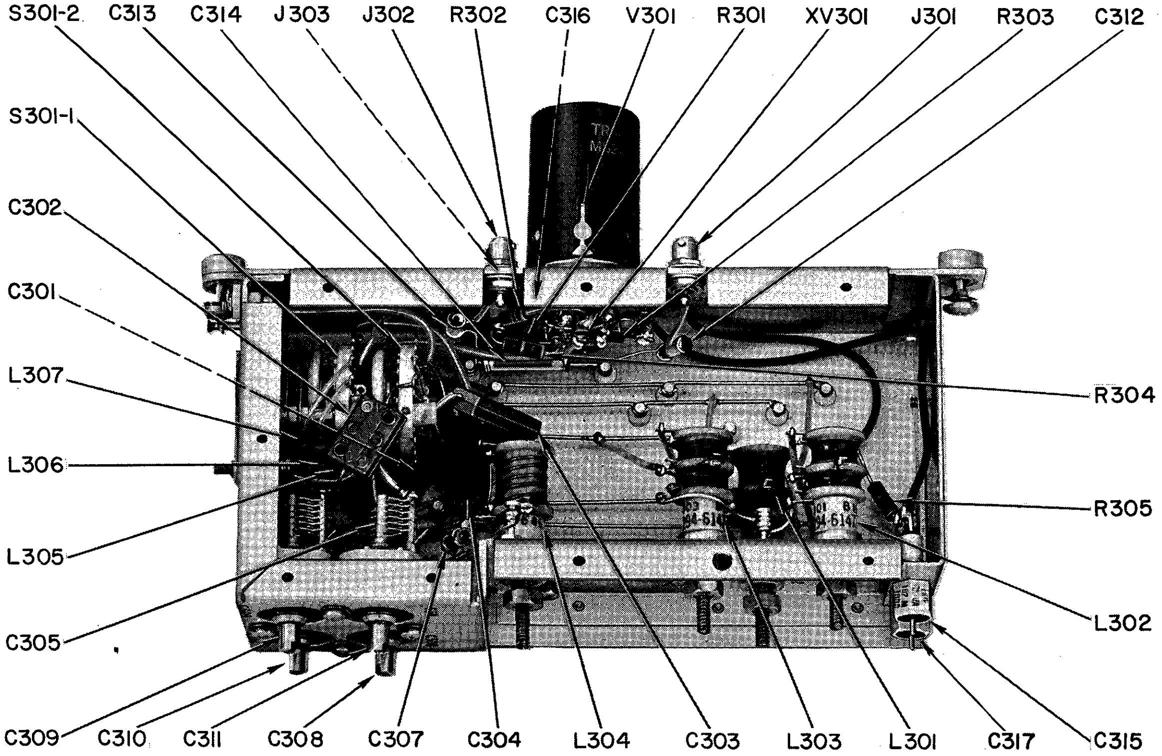

*Figure 5-36. High-Frequency Oscillator, Location of Parts*

*b.* ACCESS.—The HF oscillator is located in the lower converter deck. Raise the upper deck to reach the top of the oscillator, or tilt the entire converter drawer for access to the bottom of the oscillator section. Figure 5-36 shows the location of parts.

*c.* PRELIMINARY CHECK.—Before trouble-shooting the HF oscillator, carefully inspect the following with the power off:

(1) Seating of tube V301 in its socket

(2) Cable connections at J301 and J302

(3) Soldered connections at chassis feed-through terminals.

## WARNING

Potentials as high as 210 volts rms are present in the power supply circuits. Avoid contact.

*d.* TEST EQUIPMENT AND SPECIAL TOOLS.—Use Multimeter AN/PSM-4B, VTVM ME-6D/U and VTVM ME-30/U, or equivalents. No special tools are required.

*e.* CONTROL SETTINGS.—Use the panel control settings listed in table 5-2. Place POWER switch to ON position and allow 30 seconds for warm-up.

*f.* HF OSCILLATOR TROUBLE-SHOOTING CHART.—Table 5-10 is the trouble-shooting chart for the HF oscillator. Perform the steps in the order given and compare the results with those in the NORMAL INDICATION column. If a reading is abnormal, follow the instructions given in the NEXT STEP column. Figure 5-37 shows the location of test points. Voltage and resistance measurements for the pins of tube V301 are as follows:

## 5-15. HARMONIC AMPLIFIER.

*(See figure 5-38.)*

*a.* GENERAL.—The harmonic-amplifier subassembly consists of two shielded coil boxes. One box contains the first and second harmonic amplifiers with associated coils, parts, and band switch sections; the other contains the mixer stage, including the related coils, parts, and band switch. The boxes may be removed separately. The harmonic-amplifier circuit generates 100 kc harmonics over the frequency range of 2.9 mc to 32.9 mc. It is tuned to select the proper harmonic, which, when combined with a signal from the HF oscillator, produces the first injection IF signal of 825 kc. Faulty operation of the harmonic amplifier can disable the receiver.

*b.* ACCESS.—The harmonic amplifier is located in the lower converter deck, with the HF oscillator, and is reached in the manner described in paragraph 5-14*b.* Figure 5-39 shows the location of parts.

*c.* PRELIMINARY CHECK.—Before trouble-shooting the harmonic amplifier subassembly using table 5-11, make a preliminary inspection of the following with the power off:

(1) Seating of tubes V201, V202, and V251 in their sockets

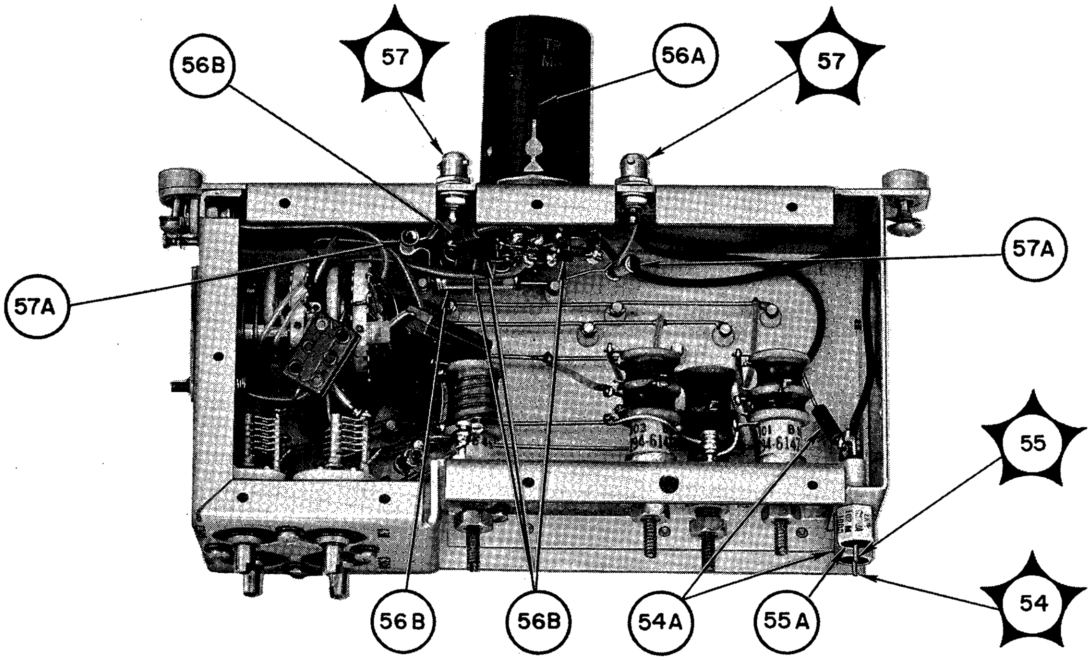

*Figure 5-37. High-Frequency Oscillator, Location of Test Points*

## TABLE 5-10. HIGH-FREQUENCY OSCILLATOR, TROUBLE-SHOOTING CHART

| STEP | TEST POINT | PRELIMINARY ACTION | NORMAL INDICATION | NEXT STEP |
|---|---|---|---|---|
| 1 | 54<br>54A<br>Figs.<br>5-35<br>5-36<br>5-37<br>55 | Connect multimeter between chassis and feed-through capacitors. Select applicable meter range. Tolerance 10%. | C317: +105 vdc | If indication is abnormal, refer to table 5-5. Check C317, C316, and R305.<br>WARNING<br>Turn power off before making ohmmeter measurements. |
| | | | C315: 6.3 vac | If indication is abnormal, refer to table 5-5. Check C315. |
| 2 | 56<br>56A<br>56B<br>Figs.<br>5-35<br>5-36<br>5-37 | Measure bias at TP J803 with VTVM on dc range. Check both ends of each frequency band by adjusting TUNING ΔF=100 KC for each measurement. | TP J803, BAND 1: 2 mc −7 vdc (minimum. 4 mc −7 vdc (minimum) | If indication is abnormal, replace V301. Check socket pin voltages. Replacing V301 may require circuit re-alignment (refer to par. 6-3*f*(3).<br>Also check C314, R301, R302, R303, and R304.<br>If an indication is abnormal for only one of the band positions, check switch contacts and tuning coils and capacitors associated with the band in which the abnormal indication was obtained. |
| | | | TP J803, BAND 2: 4 mc −5 vdc (minimum). 8 mc −4 vdc (minimum) | |
| | | | TP J803, BAND 3: 8 mc −4.8 vdc (minimum). 16 mc −2.5 vdc (minimum) | |
| | | | TP J803, BAND 4: 16 mc −5.5 vdc (minimum). 32 mc −1.1 vdc (minimum) | |
| 3 | 57<br>57A<br>Figs.<br>5-35<br>5-36<br>5-37<br>57<br>57A | Measure oscillator output at J301 or J302 with VTVM ME-30/U. Check both ends of each band as in step 2. | J301, BAND 1: 2 mc .10 v rms (minimum). 4 mc .10 v rms (minimum) | If indication is abnormal, check C312 and C313.<br>If an indication is abnormal for only one of the band positions, check switch contacts and tuning coils and capacitors associated with the band in which the abnormal indication was obtained. |
| | | | J301, BAND 2: 4 mc .10 v rms (minimum). 8 mc .15 v rms (minimum) | |
| | | | J301, BAND 3: 8 mc .15 v rms (minimum). 16 mc .20 v rms (minimum) | |
| | | | J301, BAND 4: 16 mc .25 v rms (minimum). 32 mc .25 v rms (minimum) | |

(2) Cable connections at J201, J251 and J252

(3) All soldered connections at chassis feed-through terminals.

*d.* TEST EQUIPMENT AND SPECIAL TOOLS.—Use Multimeter AN/PSM-4B, VTVM ME-30/U, Signal Generator AN/URM-25D, and Oscilloscope OS-8C/U, or their equivalents. No special tools are required.

*e.* CONTROL SETTINGS.—The control settings are listed in table 5-2. Place the POWER switch in the ON position and wait 30 seconds before making voltage measurements.

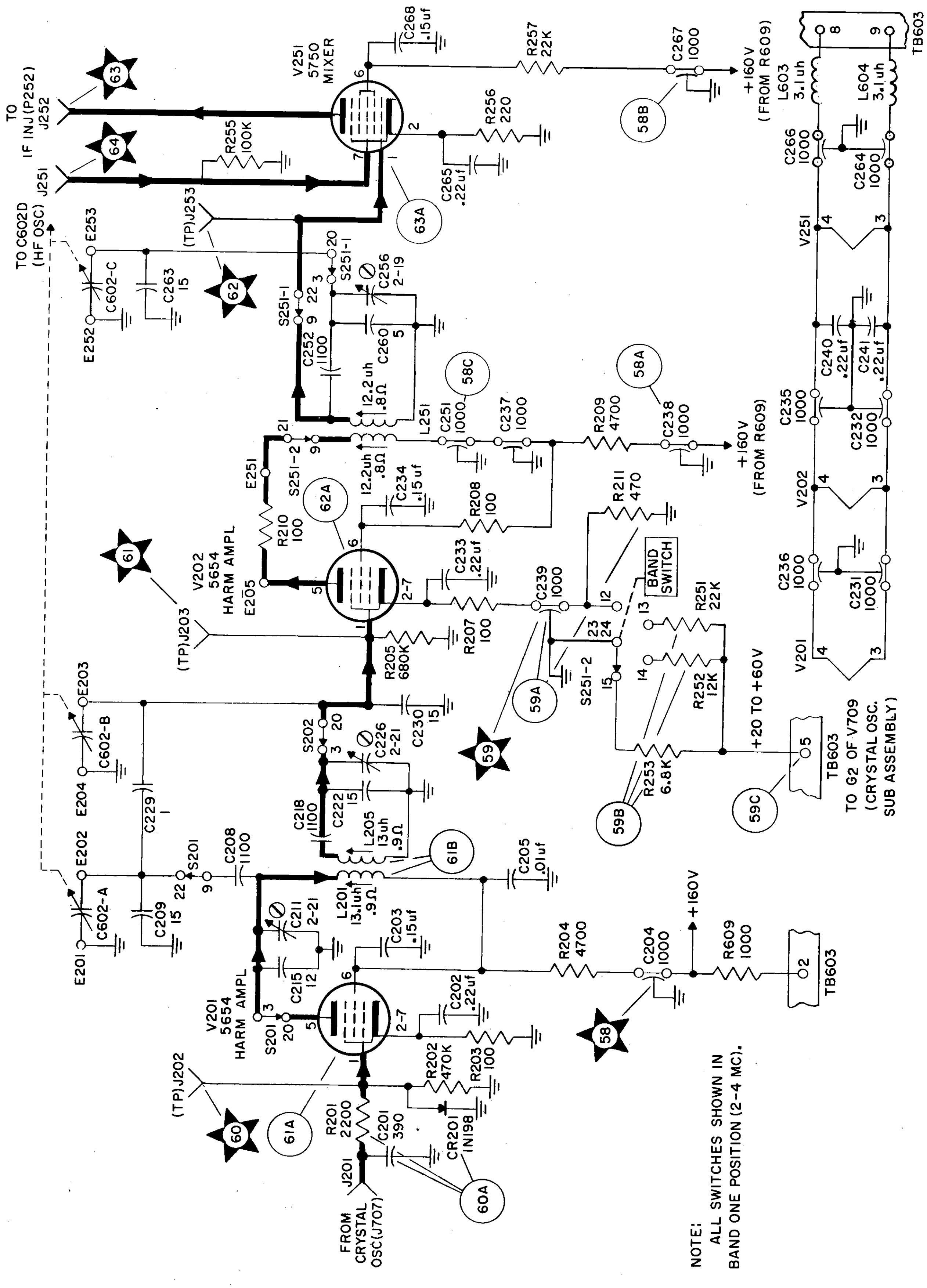

NOTE:
ALL SWITCHES SHOWN IN
BAND ONE POSITION (2-4 MC).

*Figure 5—38. Harmonic Amplifier, Functional Schematic Diagram*

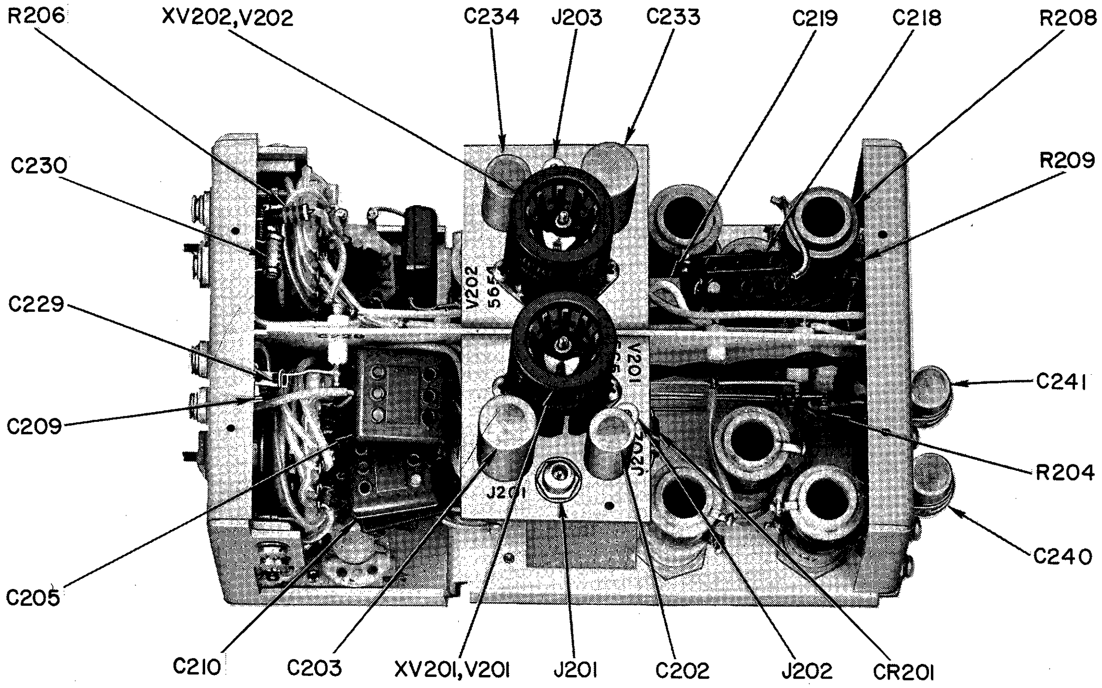

(Harmonic Amplifier Assembly)

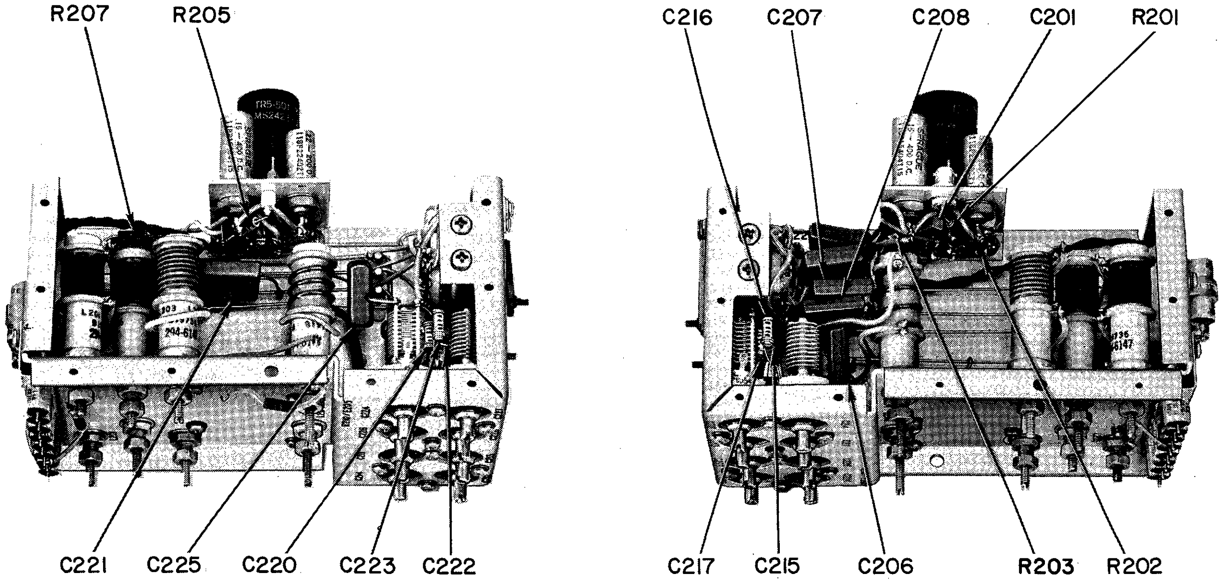

(Harmonic Amplifier Assembly)

(Harmonic Amplifier Assembly)

*Figure 5—39. Harmonic Amplifier, Location of Parts*
*(Sheet 1 of 3)*

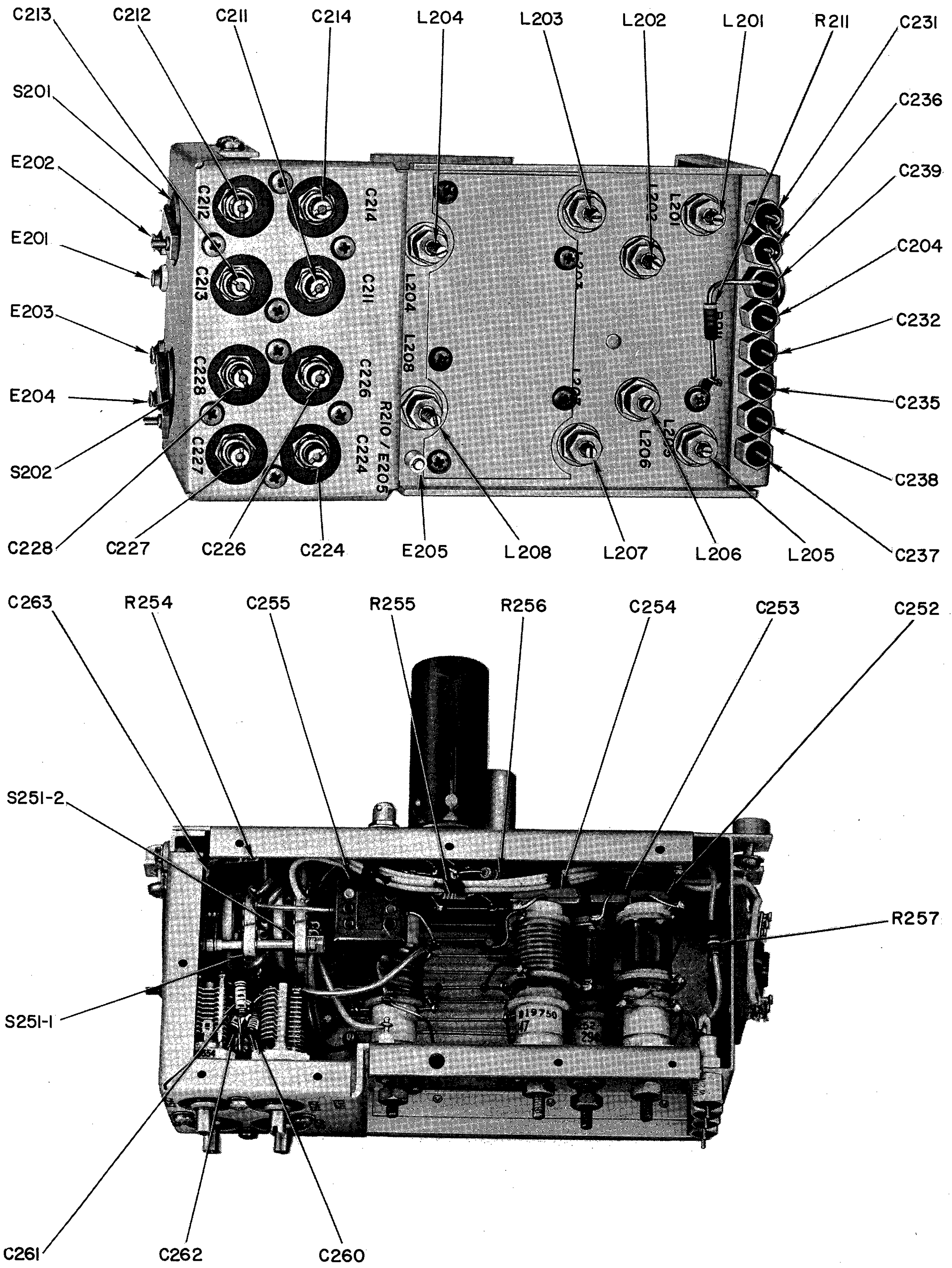

*Figure 5—39. Harmonic Amplifier, Location of Parts (Sheet 2 of 3)*

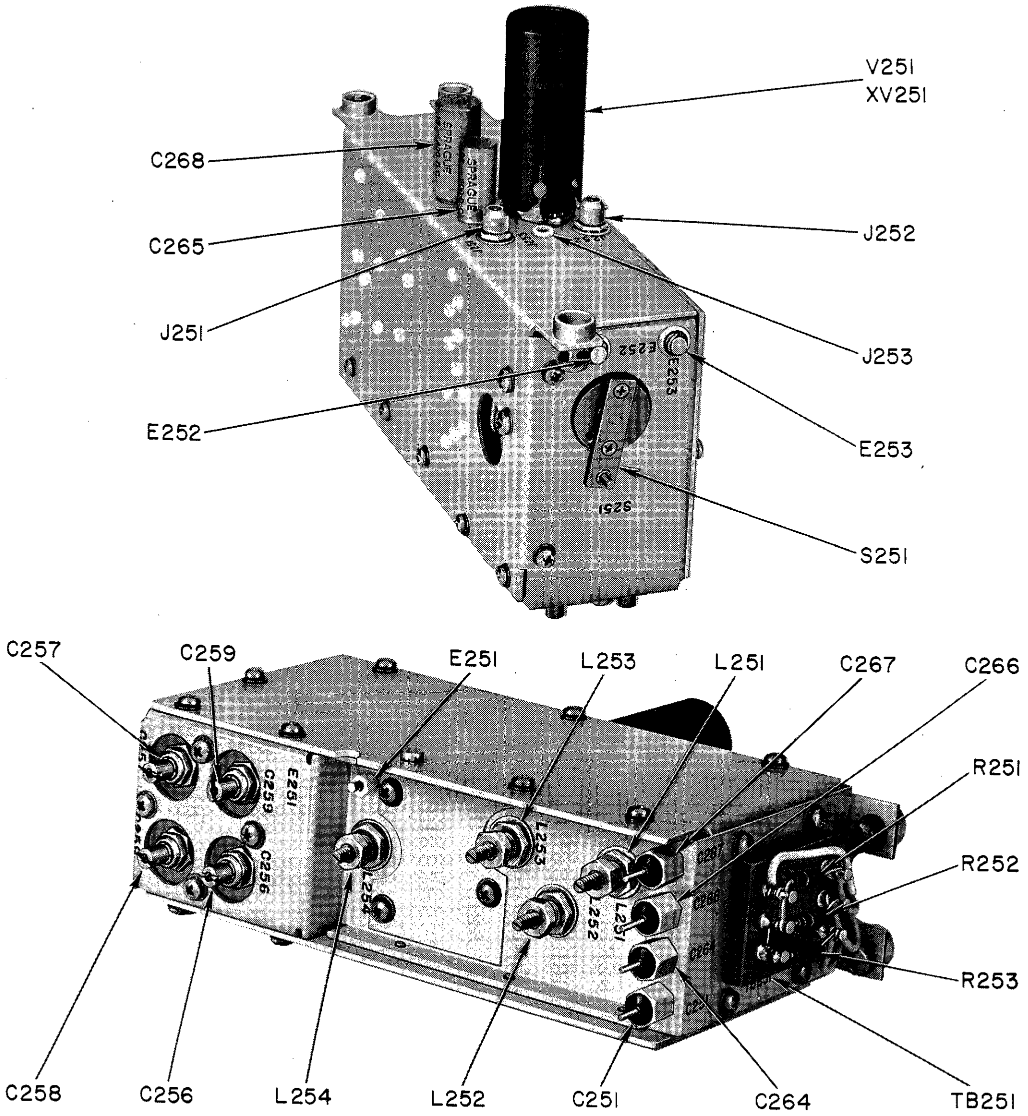

*Figure 5-39. Harmonic Amplifier, Location of Parts (Sheet 3 of 3)*

*f.* HARMONIC AMPLIFIER TROUBLE-SHOOTING CHART.—Table 5-11 is the trouble-shooting chart for the harmonic amplifier. Perform each step in the order presented. Compare the result with information in the NORMAL INDICATION column and then follow the instructions in the NEXT STEP column. Figure 5-40 shows the location of test points. Table 6-5 gives voltage and resistance measurements at the tube sockets.

## 5-16. INTERPOLATION OSCILLATOR.

*a.* FUNCTION.—Interpolation oscillator V401 generates a signal of 580 kc to 680 kc, which is applied to injection IF mixers V506 and V806. Faulty operation of the interpolation oscillator can degrade reception or disable the receiver entirely through the effect of the oscillator on the second and third conversion frequencies (220 kc and 80 kc). Figure 5-41 is a functional schematic diagram of the interpolation oscillator.

*b.* ACCESS.—The interpolation oscillator is located in the lower converter deck. For access to the top, index the upper deck; for access to the bottom, index the entire drawer. Figure 5-42 shows the location of parts.

*c.* PRELIMINARY CHECK.—With the power off, make a preliminary inspection before performing the

## TABLE 5-11. HARMONIC AMPLIFIER, TROUBLE-SHOOTING CHART

| STEP | TEST POINT | PRELIMINARY ACTION | NORMAL INDICATION | NEXT STEP |
|---|---|---|---|---|
| 1 | 58<br>58A<br>to<br>58C<br>59<br>Figs.<br>5-38<br>5-39<br>5-40 | Connect multimeter between chassis and feedthrough capacitors. Select appropriate dc ranges, tolerance ±20%. | C204: +160 vdc<br>C238: +160 vdc<br>C267: +160 vdc<br>C251: +135 vdc<br>C239: 2.5 vdc | If indication is abnormal, see table 5-5. Check C204, C238, C267, C251, R209, and C235.<br>WARNING<br>Turn off power before making ohmmeter measurements.<br>Check C239 and R211. |
| 2 | 61<br>61A<br>61B<br>Figs.<br>5-38<br>5-39<br>5-40<br>Table<br>6-5 | Remove plug P201 from J201 and tube V202 from tube socket. Connect signal generator to TP J202 and adjust for a 2.9 mc output (.01 v). Measure signal at TP J203 with VTVM ME-30/U. (TUNING ΔF= 100 KC set at 2.0 mc for this step.) | TP J203: .15 v rms (minimum) | If indication is abnormal, replace V201. Check socket pin voltages using table 6-5. Check band switch S201 and S202. |
| 3 | 62<br>62A<br>Figs.<br>5-38<br>5-39<br>5-40<br>Table<br>6-5 | Connect signal generator to TP J203 and adjust for a 2.9 mc output (.15 v). Measure signal at TP J253 with VTVM. (Replace tube V202 in its socket and remove tube V251 for this test.) | TP J253: 1.0 v rms (approximately) | If indication is abnormal, replace tube V202. Check socket pin voltages using table 6-5. Check band switch S251-1 and S251-2. Replace tube V251 in its socket. |
| 4 | 60<br>60A<br>Figs.<br>5-38<br>5-39<br>5-40 | Connect signal generator to J201 through a .01 ufd capacitor and a 10 k resistor. Adjust for a 100 kc output (2.0 v). Connect oscilloscope to TP J202 and note the clipped waveform. (Adjust sweep to approximately 20 kc/sec.) | TP J202: Pattern shows clipping of positive alternation. | If indication is abnormal, check diode CR201 and resistors R201 and R202. |

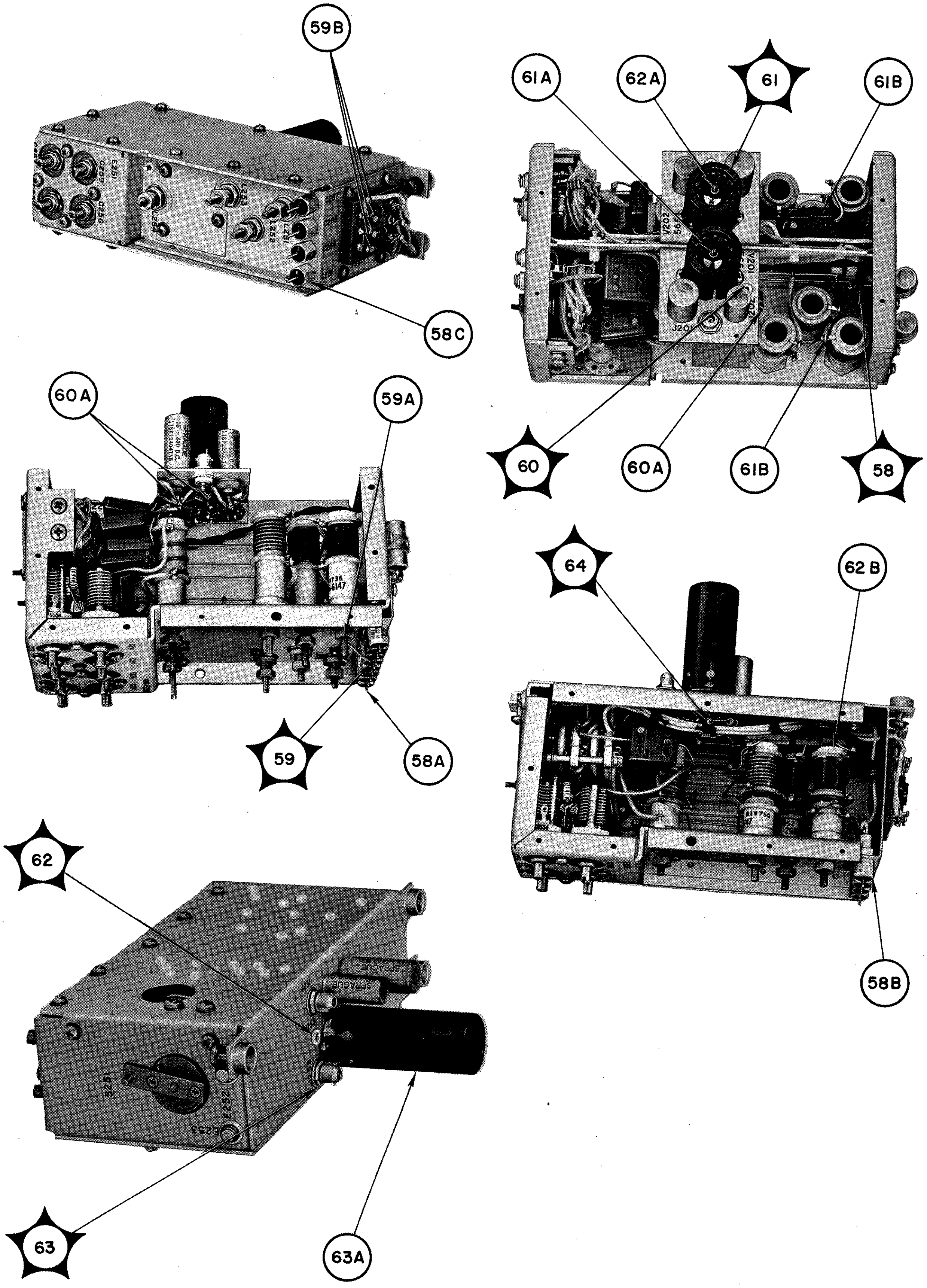

Figure 5—40. Harmonic Amplifier, Location of Test Points

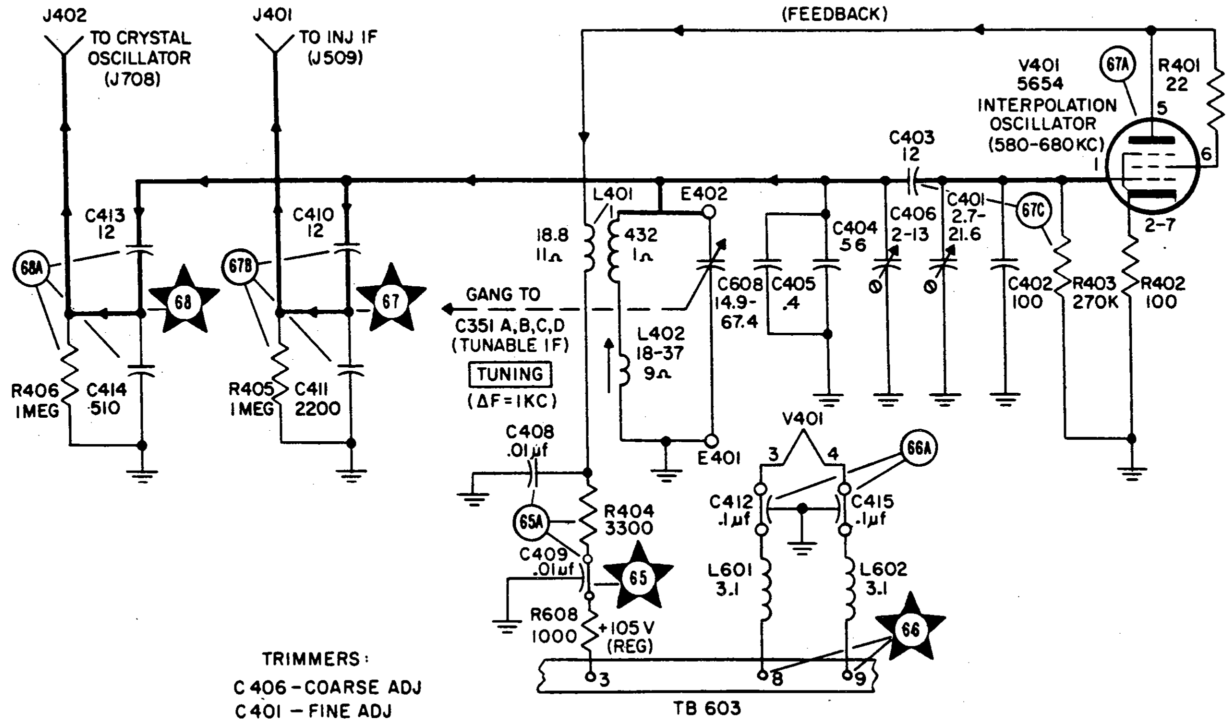

*Figure 5-41. Interpolation Oscillator, Functional Schematic Diagram*

trouble-shooting steps listed in table 5-12. Check the following:

(1) Seating of tube V401 in its socket

(2) Cable connections at J401 and J402

(3) All soldered connections at chassis feed-through terminals.

*d.* TEST EQUIPMENT AND SPECIAL TOOLS.—Use multimeter AN/PSM-4B and VTVM ME-30/U or equivalent. No special tools are needed.

*e.* CONTROL SETTINGS.—Set the panel controls to the position shown in table 5-2. Place POWER switch to ON position and allow 30 seconds for warm-up.

*f.* INTERPOLATION OSCILLATOR TROUBLE-SHOOTING CHART.—Measure the dc supply voltages before checking for normal oscillator operation. The interpolation oscillator generates signal frequencies of 580 kc to 680 kc regardless of the BAND switch position; therefore, the setting of the TUNING ΔF = 100 KC control is not important. Figure 5-43 shows the location of subassembly test points. Voltage and resistance measurements for V401 socket pins follow:

To perform steps 3 and 4, expose the bottom of the interpolation oscillator subassembly and remove the cover plate. Test points ★ 67 and ★ 68 may be found at 1-megohm resistors R405 and R406.

**CAUTION**

Do not remove cables at connectors J401 and J402 with the equipment energized. Resistors R405 and R406 are the grid-return paths for cathode bias applied to tubes V506 and V806 in the injection IF amplifier and synthesizer subassemblies respectively. Operation of these tubes without bias is not advisable.

## 5-17. USB DETECTOR-AMPLIFIER.

*a.* DIAGRAMS.—Figure 5-44 is a functional block diagram of the USB detector-amplifier circuits. It is followed by these functional schematic diagrams:

| *Figure* | *Circuit* |
|---|---|
| 5-45 | 78 kc IF amplifier |
| 5-46 | AGC amplifier |
| 5-47 | USB demodulator |
| 5-48 | USB audio amplifier |

For a complete schematic diagram of the USB detector-amplifier, refer to figure 6-19.

*b.* ACCESS.—The USB detector-amplifier is located in the lower demodulator deck. For access to the top, raise the upper demodulator deck; for access to the bottom, tilt the entire demodulator drawer. Figure 5-50 gives the location of parts.

## TABLE 5-12. INTERPOLATION OSCILLATOR, TROUBLE-SHOOTING CHART

| STEP | TEST POINT | PRELIMINARY ACTION | NORMAL INDICATION | NEXT STEP |
|---|---|---|---|---|
| 1 | 65<br>65A<br>Figs.<br>5-41<br>5-42<br>5-43 | Measure supply voltage by connecting multimeter between chassis feed-through capacitor and chassis, using applicable dc range; tolerance 10%. | C409: +105 vdc (reg) | If indication is abnormal, refer to table 5-5. Check C409 and C408.<br>WARNING<br>Turn off power before making ohmmeter measurements. |
| 2 | 66<br>66A<br>Fig.<br>5-41 | Measure V401 heater supply at terminals 8 and 9 of TB603. Select 10 vac multimeter range. | TB603: 6.3 vac 10% tol. (terminals 8-9) | If indication is abnormal, refer to table 5-5. Check C412 and C415. Check filament chokes L601 and L602. |
| 3 | 67<br>67A<br>67B<br>67C<br>Figs.<br>5-41<br>5-42<br>5-43 | Connect VTVM between chassis and junction of R405 and C411. Measure the 580 to 680 kc output signal for two positions of the TUNING ($\Delta F =$ 0.5 KC) control. | R405: (junction) 001.0 kc 0.1 v rms. 099.9 kc 0.1 v rms (minimum) | If indication is abnormal, replace V401. Check socket pin voltage, using V-R table. Check R405, C410, C411, C403, and R403. |
| 4 | 68<br>68A<br>Figs.<br>5-41<br>5-42<br>5-43 | Measure output signal at the junction of R406 and C414 with VTVM, as described in step 3. | R406: (junction) 001.0 kc 0.1 v rms. 099.9 kc 0.1 v rms (minimum) | If indication is abnormal, check R406, C413, and C414. |

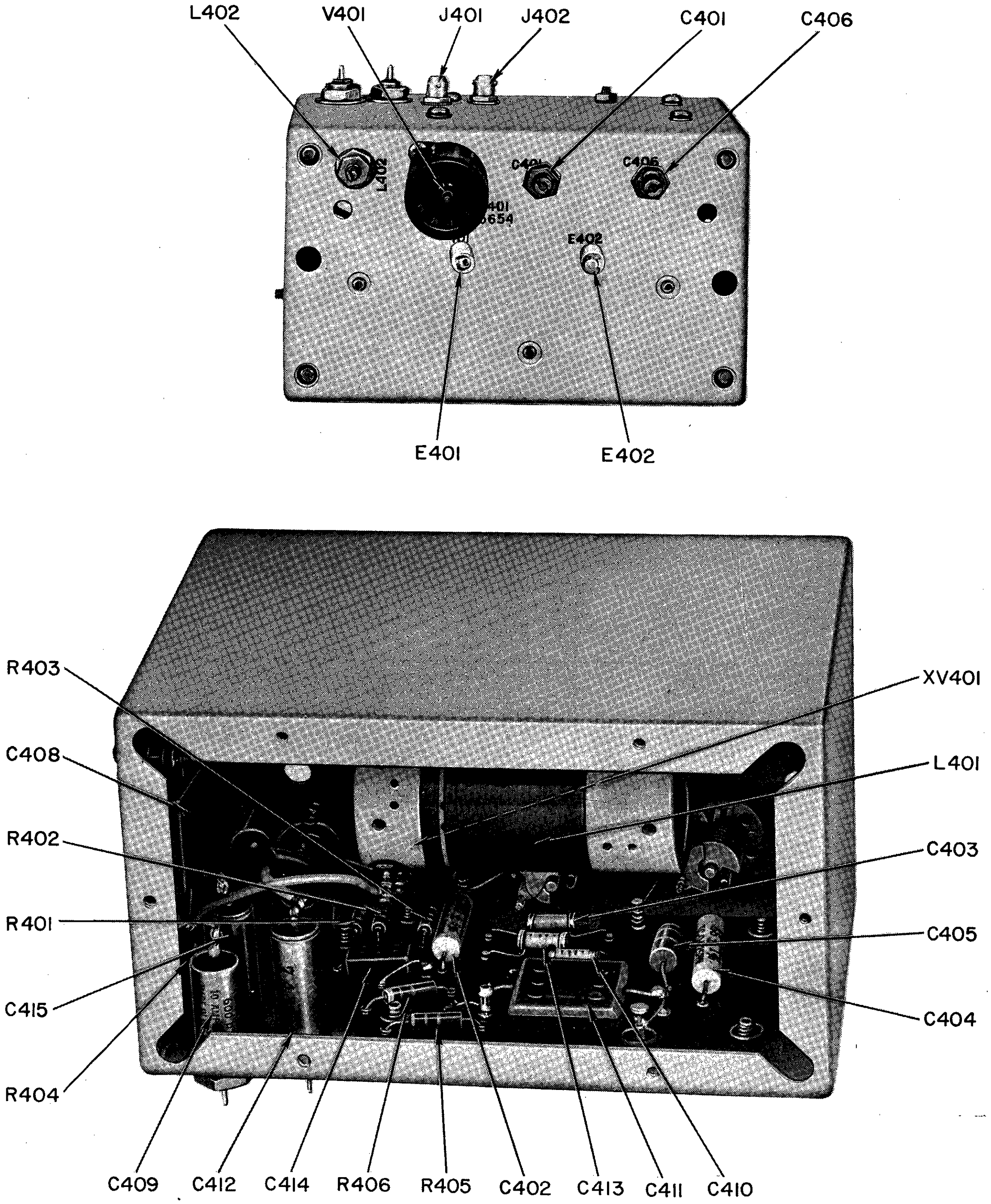

*Figure 5-42. Interpolation Oscillator, Location of Parts*

*c.* PRELIMINARY CHECK.—Faulty operation of the USB detector-amplifier will affect reception of both upper and lower sidebands because IF amplifier V1003 is common to both. Before trouble-shooting the USB detector-amplifier—and with the power off—make a preliminary inspection, stressing the following:

(1) Seating of tubes V1001 through V1008 in their sockets

(2) Cable connections J1001 through J1003 and TB1001

(3) Soldered connections at chassis feed-through terminals

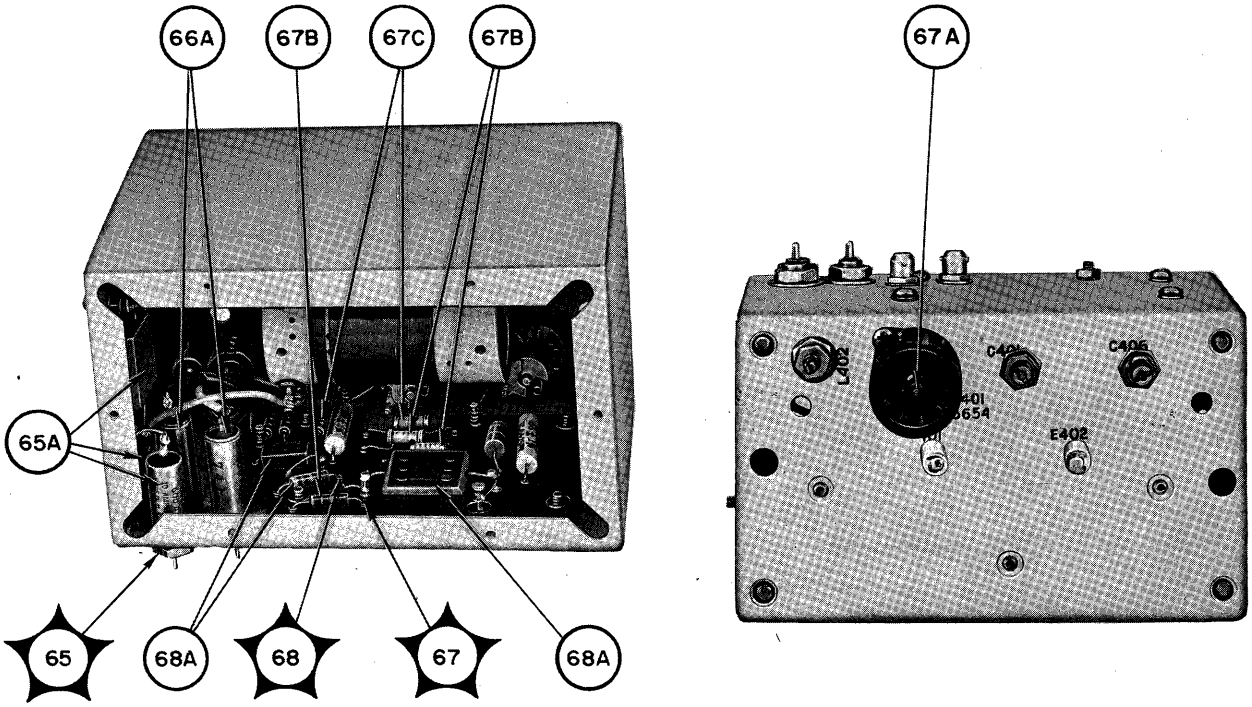

*Figure 5-43. Interpolation Oscillator, Location of Test Points*

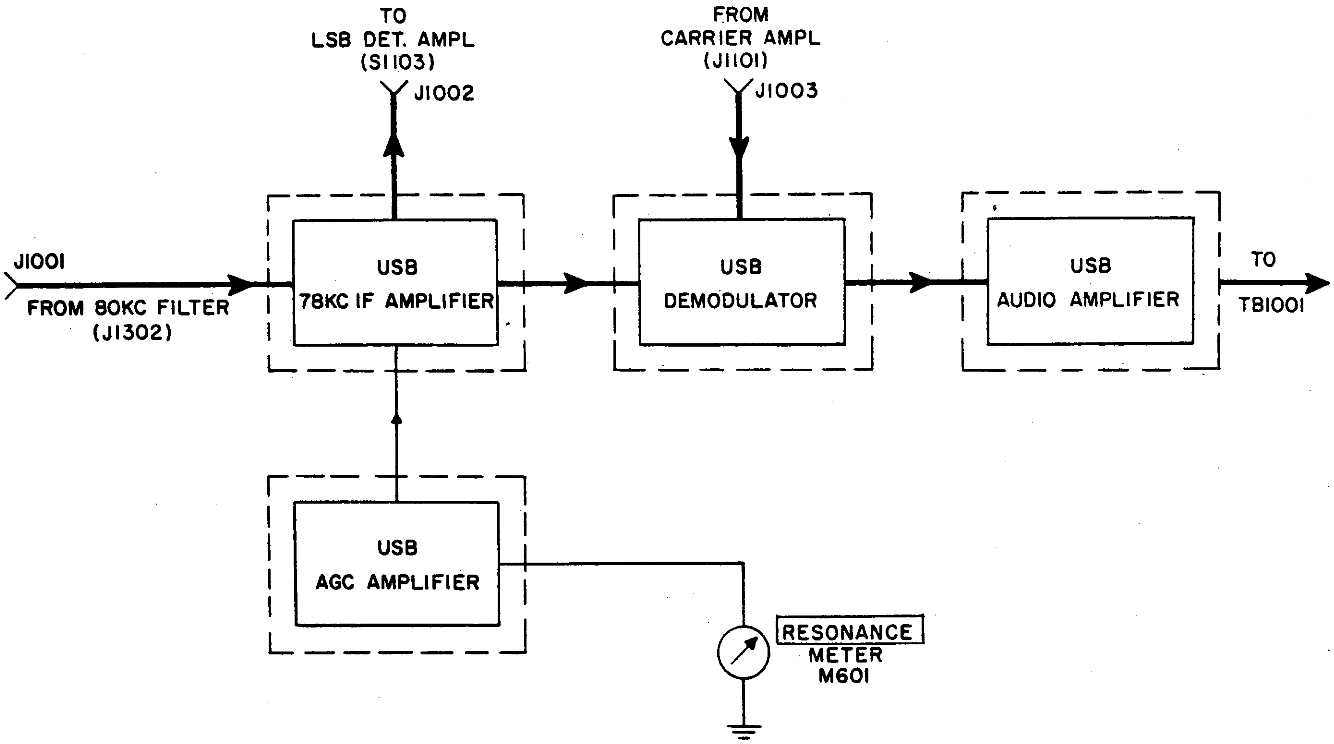

*Figure 5-44. USB Detector-Amplifier, Functional Block Diagram*

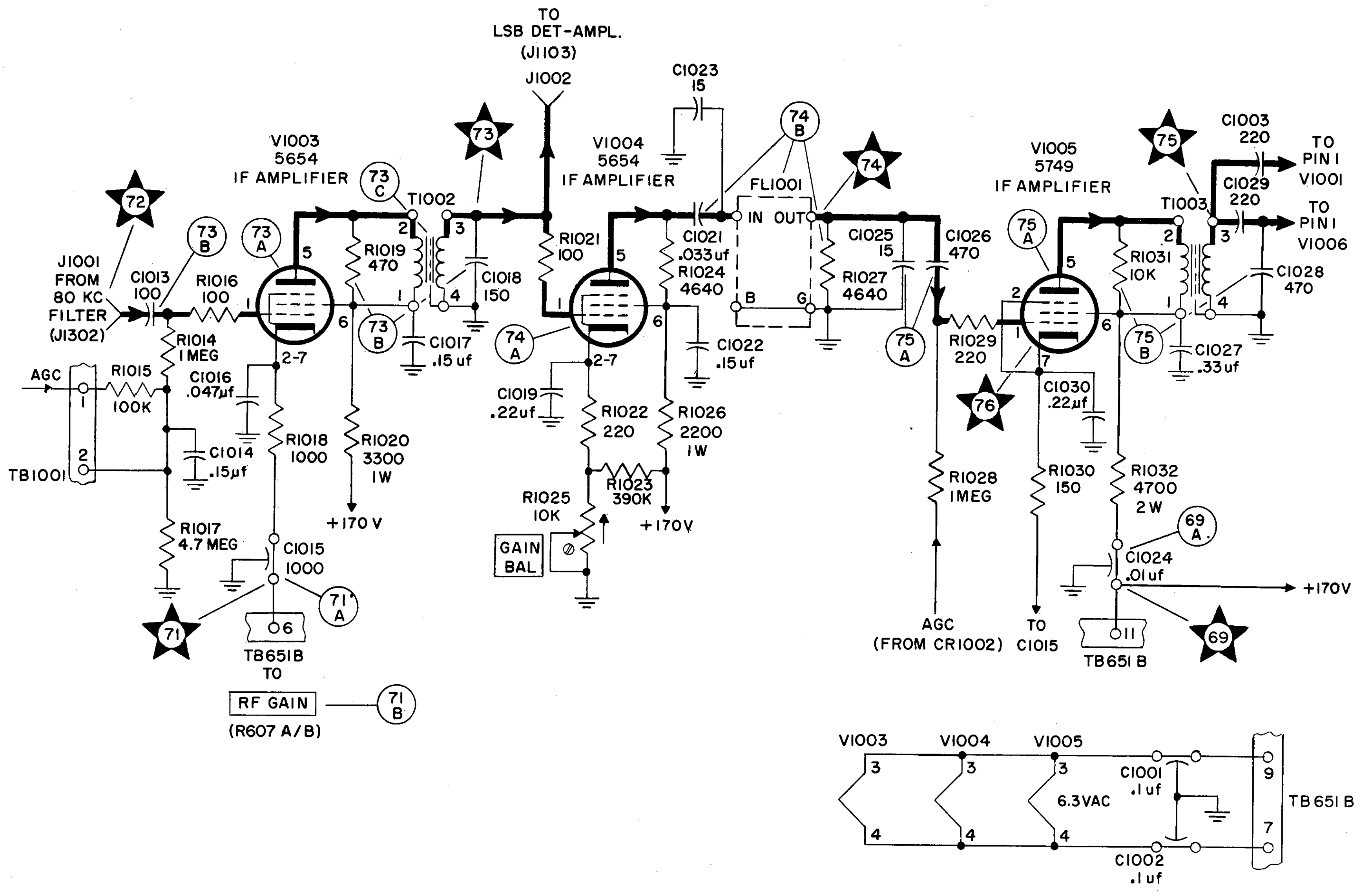

Figure 5–45. USB Detector-Amplifier, 78 Kc IF Amplifier, Functional Schematic Diagram

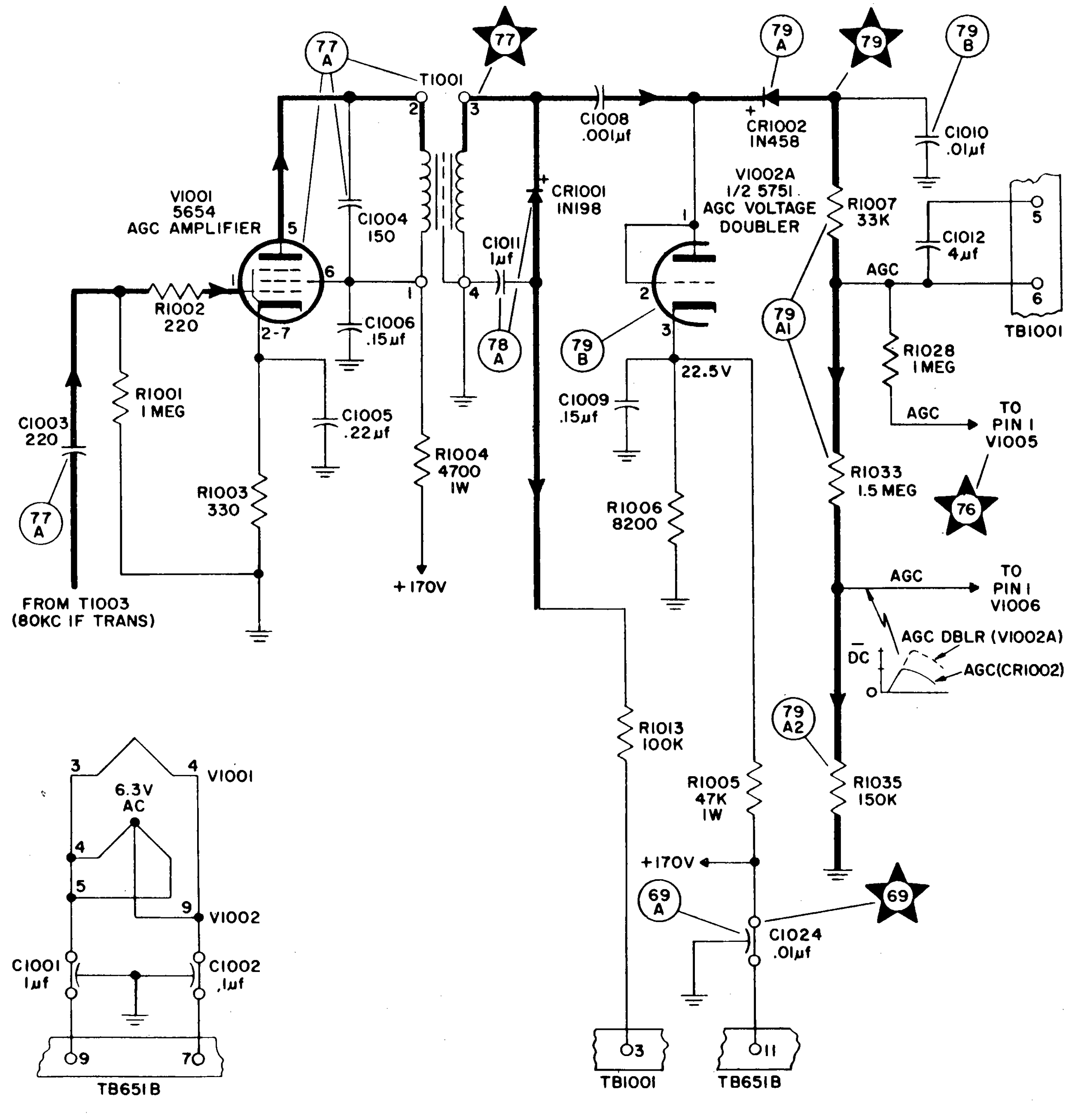

*Figure 5-46. USB Detector-Amplifier, AGC Amplifier, Functional Schematic Diagram*

(4) Operation of panel controls A.F. LEVEL LINE A, A.G.C. UPPER ON/S.S.B./OFF, A.G.C. UPPER SLOW/FAST, and RECEPTION.

*d.* TEST EQUIPMENT.—To perform the tests listed in table 5-13, use Multimeter AN/PSM-4B, VTVM ME-30/U, and Signal Generator AN/URM-25D. No special tools are required.

*e.* CONTROL SETTINGS.—Use the control settings given in table 5-2. Exceptions are given in table 5-13 when required. Place POWER switch to the ON position and allow 30 seconds for warm-up.

*f.* USB DETECTOR-AMPLIFIER TROUBLE-SHOOTING CHART.—The test steps described in table 5-13 include measurements of initial supply voltages, and stage-by-stage signal tracing. Compare the result of each step with the information given in the NORMAL INDICATION column and follow instructions given in the NEXT STEP column. Perform the steps in the order shown. Figure 5;50 shows the location of test points and table 6-9 provides voltage-resistance measurements for the tube sockets.

## 5-18. CRYSTAL OSCILLATOR.

*a.* GENERAL.—The crystal oscillator subassembly (figure 5-51) contains three circuit sections—the crystal oven oscillator and amplifier (figure 5-52), the crystal oscillator and amplifier (figure 5-53), and the crystal oscillator frequency divider (figure 5-54). For a complete schematic diagram of the crystal oscillator subassembly, refer to figure 6-17.

Standard frequency signals provided by the crystal oscillator circuits are applied to the frequency divider, the synthesizer, and the harmonic amplifier. Faulty operation of the crystal oscillator can affect the accuracy of receiver frequency calibration or disable the receiver completely, because the absence of a standard frequency signal can prevent production of the second and third conversion frequencies (220 kc and 80 kc) and disrupt operation of the injection IF amplifier and synthesizer circuits.

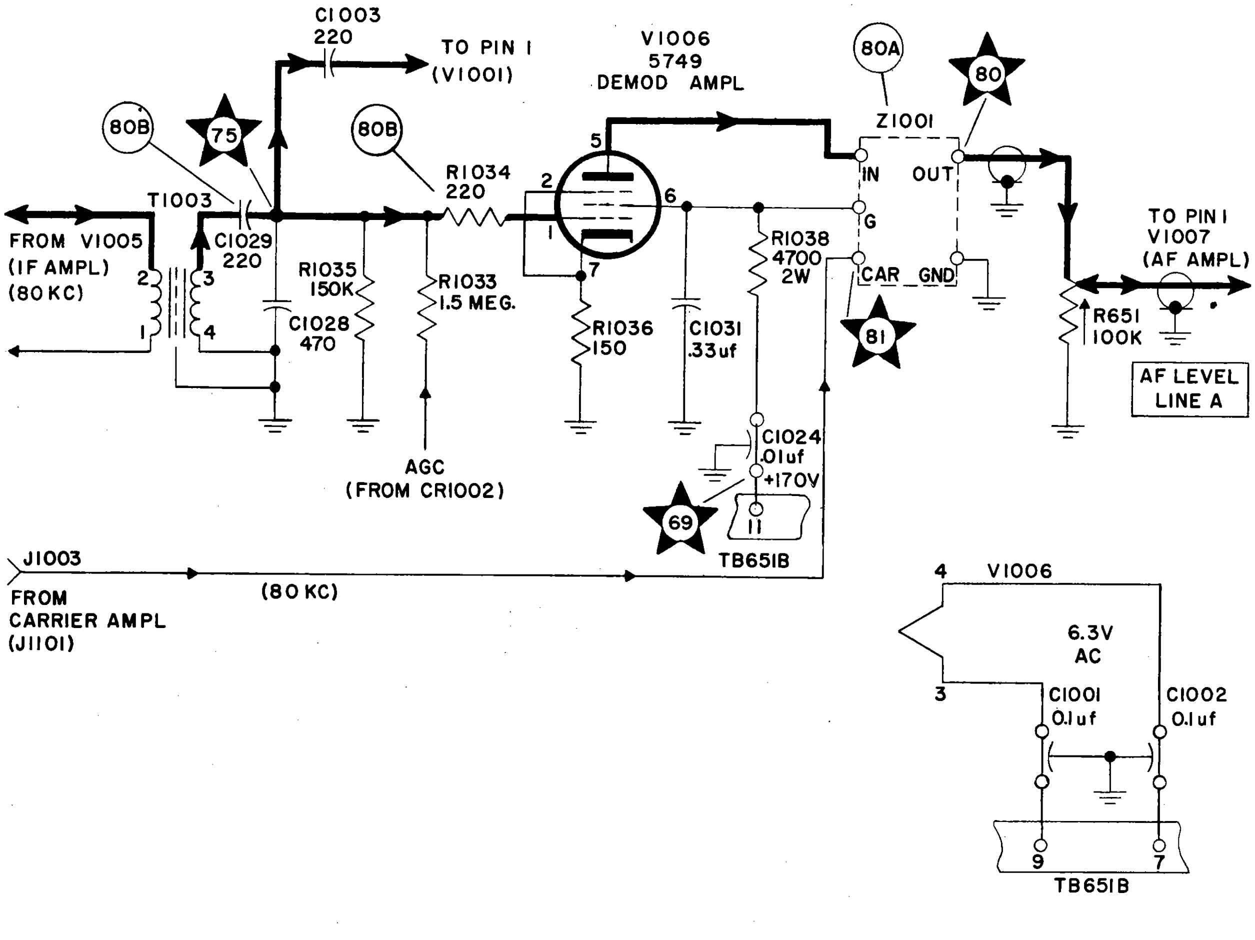

Figure 5-47. USB Detector-Amplifier, Demodulator, Functional Schematic Diagram

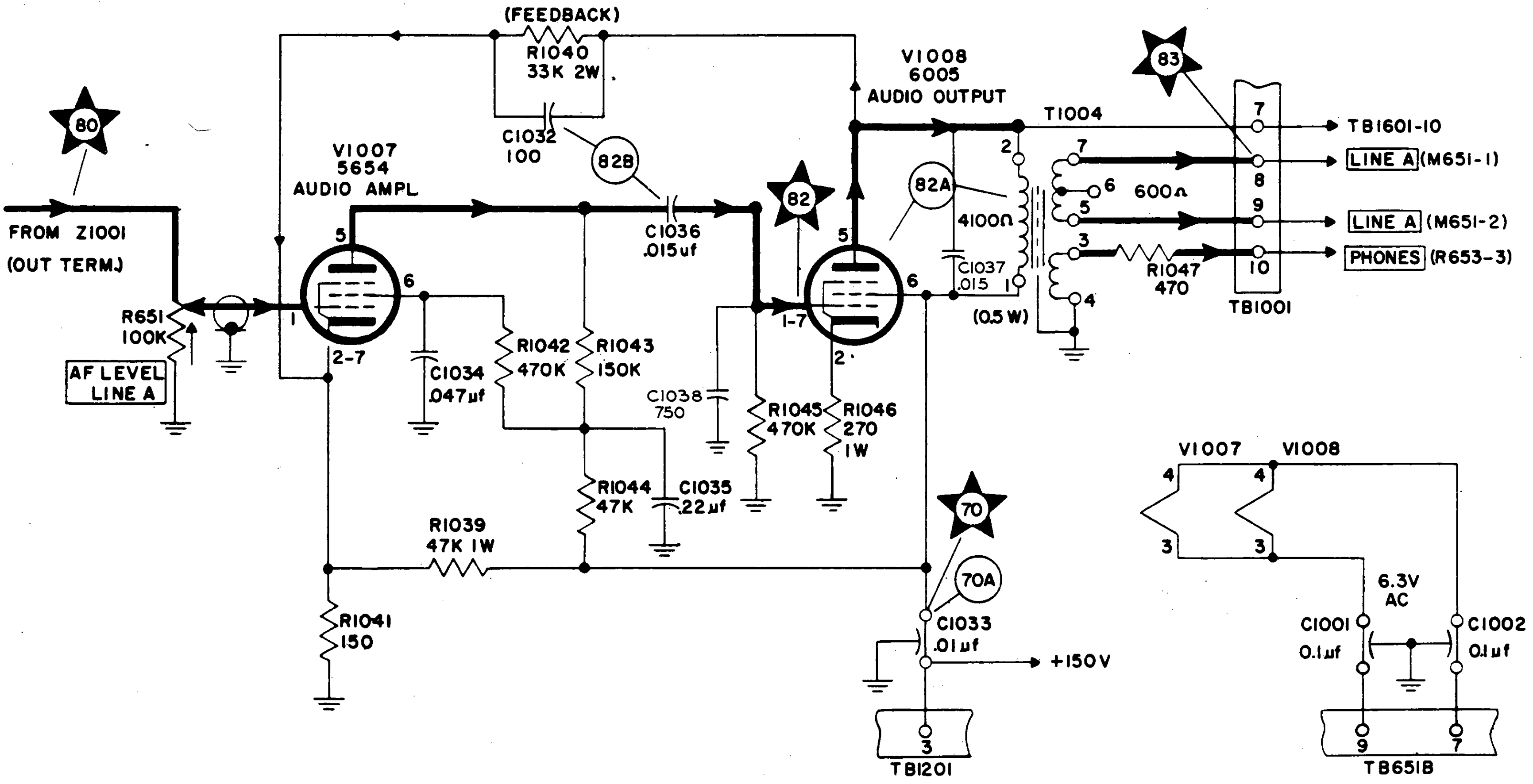

*Figure 5-48. USB Detector-Amplifier, Audio Amplifier, Functional Schematic Diagram*

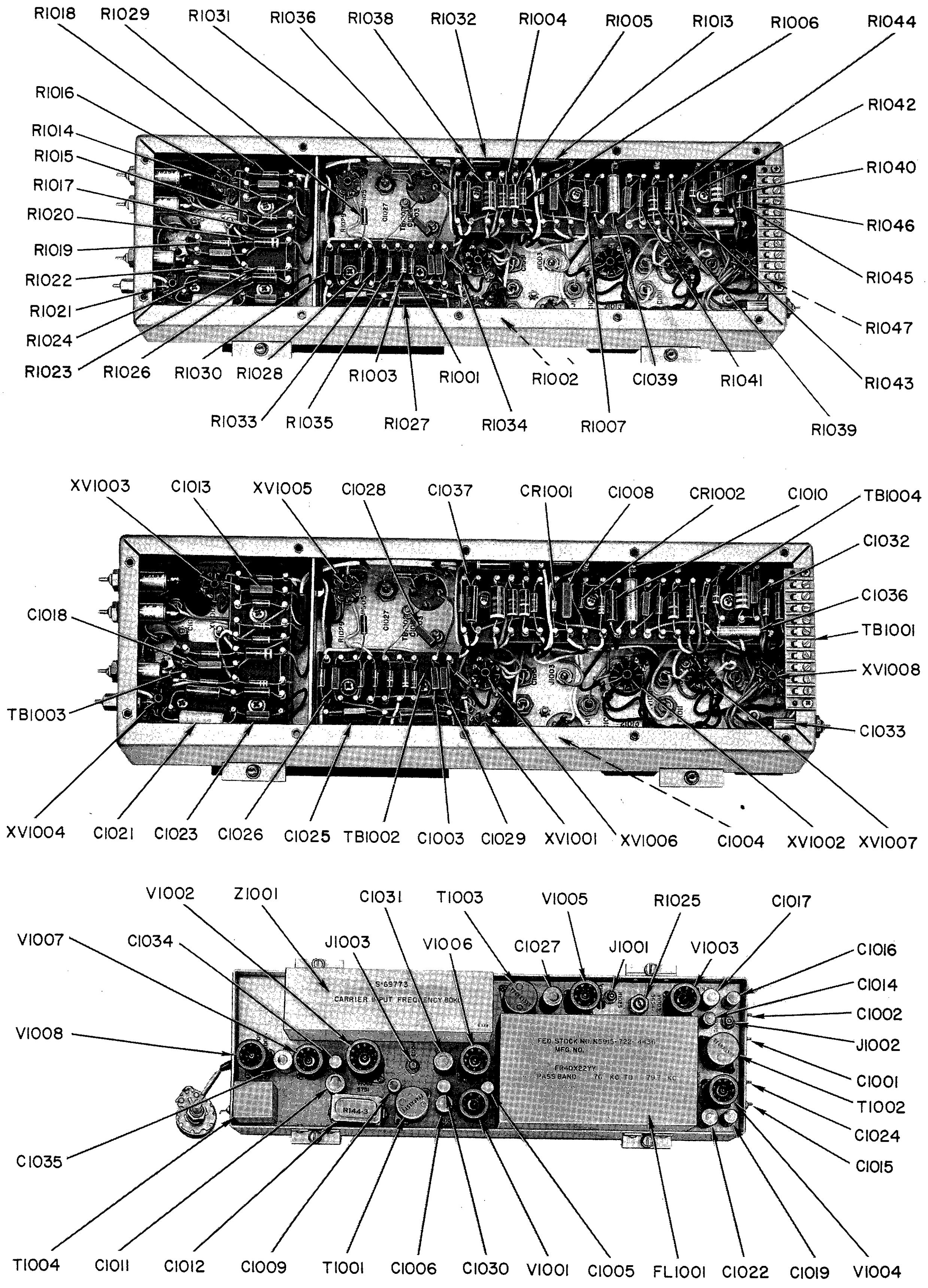

*Figure 5-49. USB Detector-Amplifier, Location of Parts*

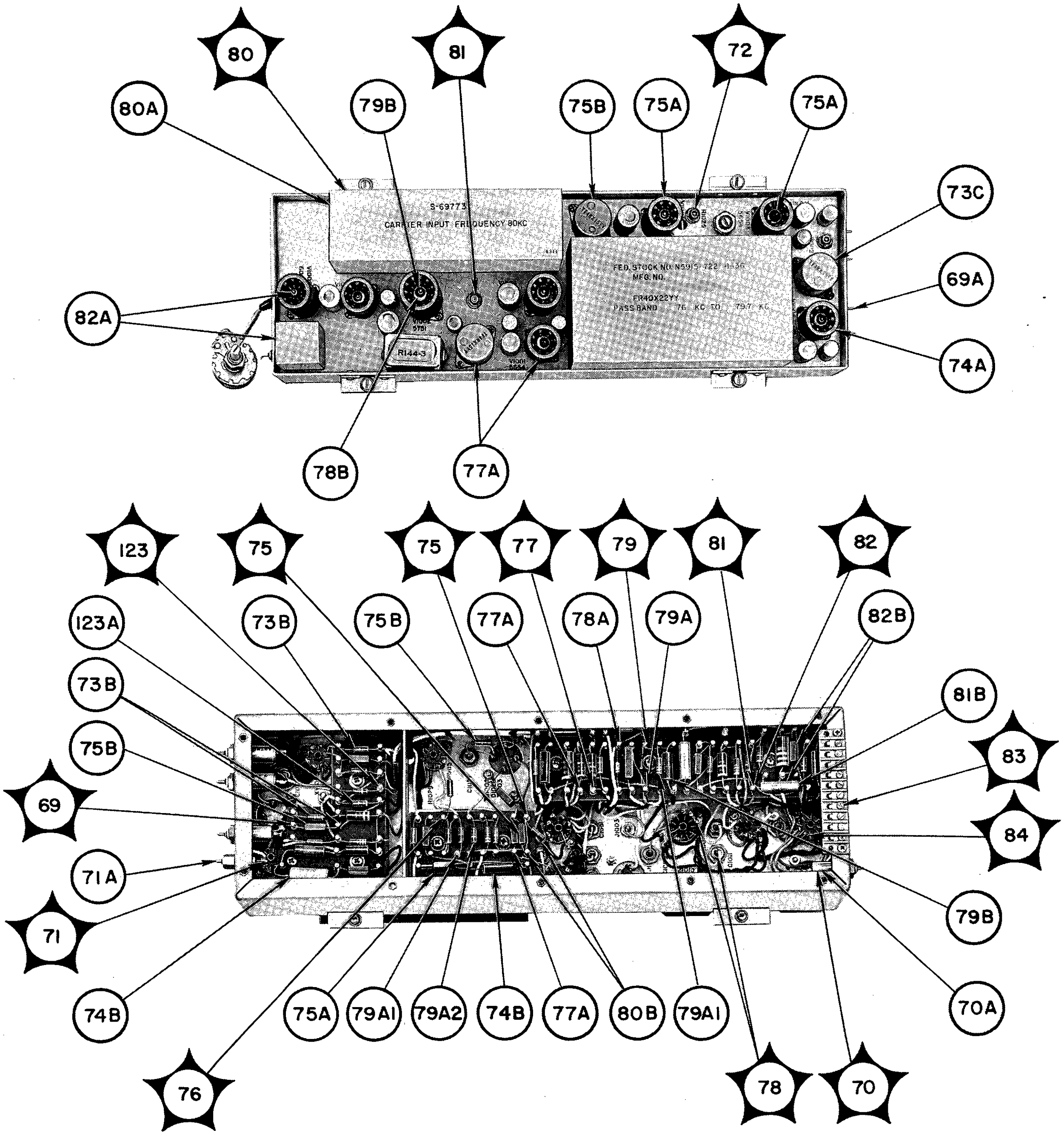

Figure 5-50. USB Detector-Amplifier, Location of Test Points

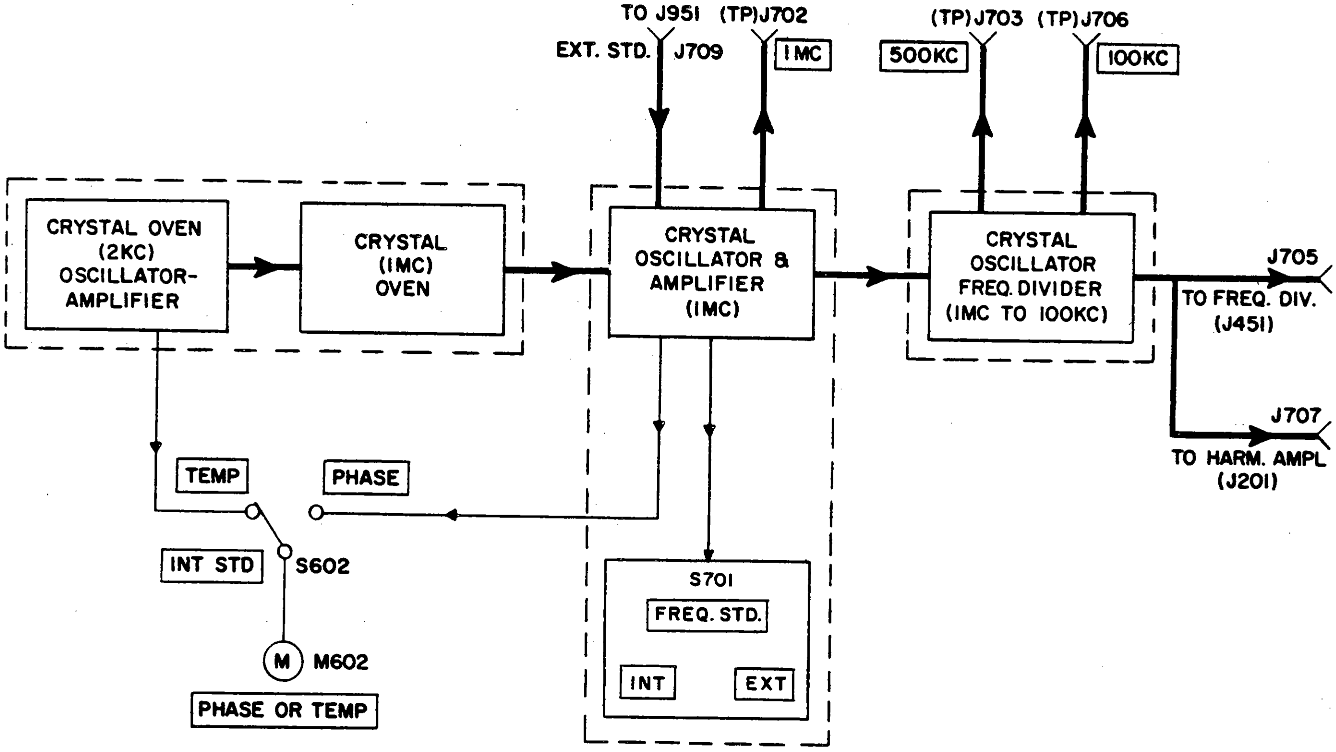

*Figure 5-51. Crystal Oscillator, Functional Block Diagram*

## TABLE 5-13. USB DETECTOR-AMPLIFIER, TROUBLE-SHOOTING CHART

| STEP | TEST POINT | PRELIMINARY ACTION | NORMAL INDICATION | NEXT STEP |
|---|---|---|---|---|
| 1 | 69<br>69A | Connect multimeter to chassis feed-through capacitors. Select 200 vdc range; tolerance ±20%.<br>NOTE: Place RECEPTION switch in the SSB position for all steps. | C1024: +170 vdc | If indication is abnormal, perform steps in table 5-6. Check C1024.<br>WARNING<br>Turn off power before making ohmmeter measurements. |
| | | | C1033: +150 vdc | See above; check C1033. |
| | 71<br>Figs. 5-44 to 5-50 | | C1015: 2.5 vdc | If indication is abnormal, check R605 and R606 and RF GAIN control R607A-B. |

## TABLE 5-13. USB DETECTOR-AMPLIFIER, TROUBLE-SHOOTING CHART (cont)

| STEP | TEST POINT | PRELIMINARY ACTION | NORMAL INDICATION | NEXT STEP |
|---|---|---|---|---|
| 2 | ★72<br>★73<br>(73A)<br>(73B)<br>★74<br>(74A)<br>(74B)<br>★75<br>Figs.<br>5-45<br>5-49<br>5-50<br>Table<br>6-9 | Remove plug P1001 from J1001 and connect signal generator to J1001. Adjust for a 79 kc output (60 uv).<br>Set RF GAIN control at fully clockwise position and measure signal at test points with VTVM ME-30/U. | V1004 pin 1: 0.2 mv (minimum) | If indication is abnormal, replace V1003. Check socket pin voltages with table 6-9. Check C1013, T1002, and C1018. |
| | | | V1005 pin 1: 1.0 mv (minimum) | If indication is abnormal, replace V1004. Check socket pin voltages. Check C1021, FL1001, R1027, and C1025. (See par. 6-4*d* for GAIN BAL adjustment information.) |
| | | | V1006 pin 1: 9.0 mv (minimum) | If indication is abnormal, replace V1005. Check socket pin voltages. Check T1003, C1026, C1028, R1029, and R1031. |
| 3 | ★80<br>(80A)<br>(80B)<br>Fig.<br>5-47 | With signal generator at J1001 as described in step 2, set the AF LEVEL LINE A control fully clockwise and measure at test points with VTVM. | V1007 pin 1: 60 mv (minimum) | If indication is abnormal, replace V1006. Check socket pin voltages. If still abnormal, perform step 4. Check C1029, R1034, and R651. |
| 4 | ★81<br>Fig.<br>5-47 | Measure 80 kc carrier signal at Z1001 with VTVM ME-30/U. | Z1001 terminal CAR: 2.5 v rms (approx) | If indication is abnormal, refer to par. 6-7 and test carrier amplifier circuit. |

## TABLE 5-13. USB DETECTOR-AMPLIFIER, TROUBLE-SHOOTING CHART (cont)

| STEP | TEST POINT | PRELIMINARY ACTION | NORMAL INDICATION | NEXT STEP |
|---|---|---|---|---|
| 5 | 82<br>82A<br>82B<br>138<br>Figs. 5-49 5-50 Table 6-9 | With signal generator at J1001 as described in step 2, set AF LEVEL LINE A control fully clockwise and measure at test points with VTVM ME-30/U. | V1008 pins 1 and 7: 1.25 v rms (minimum) | If indication is abnormal, replace V1007. Check socket pin voltages. Check C1036, C1032, and R1040. |
| | | | J1802: 1.9 v rms (minimum) LINE A (600 ohm load connected). Refer to figures 5-77 and 5-79. | If indication is abnormal, replace V1008. Check socket pin voltages. Check T1004 and connections at TB1001. |
| 6 | 77<br>77A | To test AGC amplifier circuit, place UPPER AGC switch in the ON position. Signal generator still at J1001 as described in step 2. | T1001 terminal 3: 6 v rms (minimum) | If indication is abnormal, replace V1001. Check socket pin voltages. Check T1001, C1004, and R1002. |
| | | Measure the signal at test points with VTVM ME-30/U. Use VTVM ME-6D/U for dc measurements. | | |
| | 79<br>Figs. 5-46 5-49 5-50 | | Junction CR1002 and C1010: −6 vdc (minimum) | If indication is abnormal, check diode CR1002 and components C1010, R1007, R1033 and R1035. |
| 7 | 79<br>79A<br>79A2<br>Figs. 5-46 5-49 5-50 | To test the AGC voltage doubler circuit (V1002-A), place UPPER AGC switch in the ON position and increase the output of the signal generator to 100 uv and note increase in AGC voltage at the junction of CR-1002 and C1010. | Junction CR1002 and C1010: −8 vdc (minimum) | If indication is abnormal, replace V1002. Check socket pin voltages. |

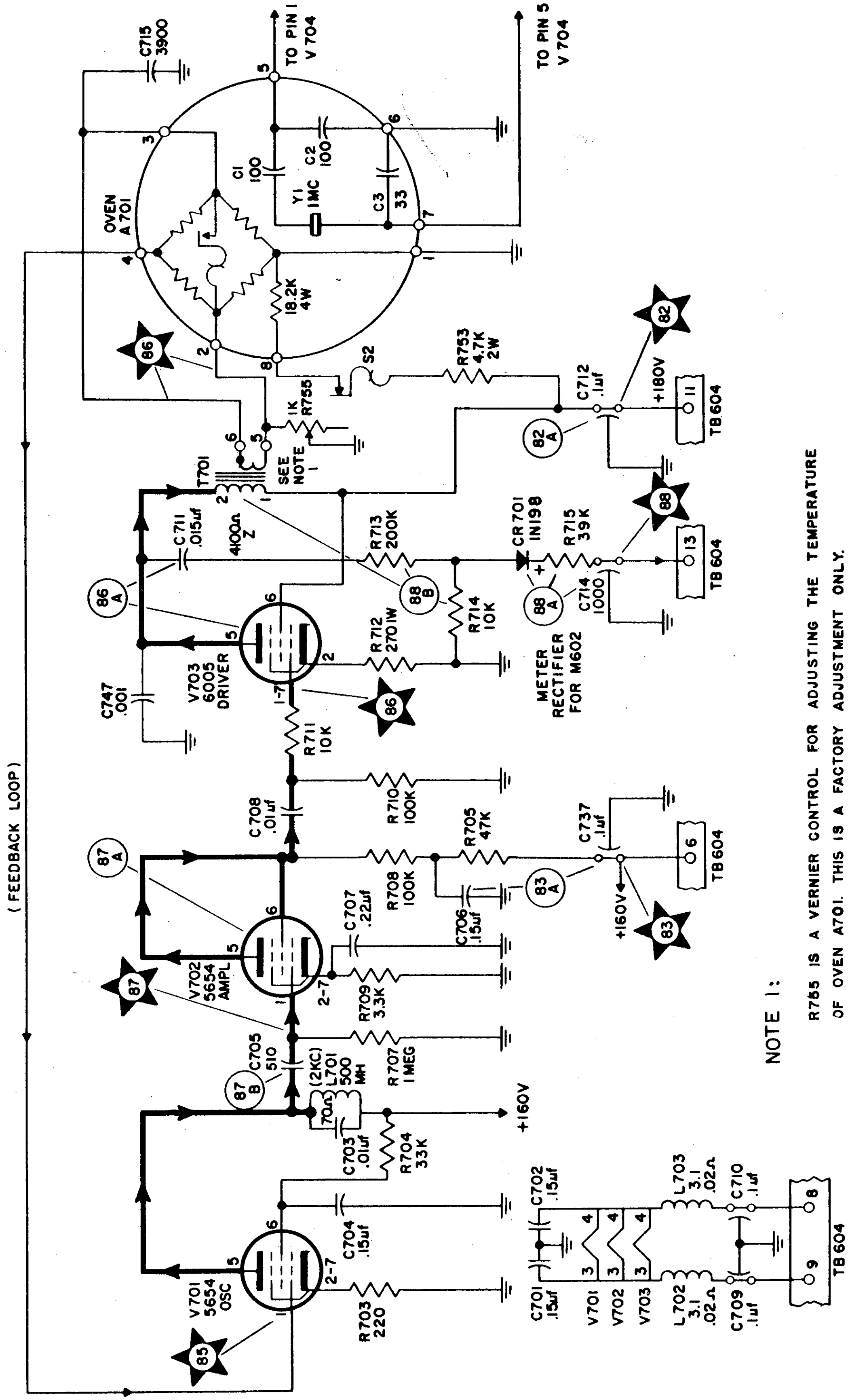

NOTE 1:

R755 IS A VERNIER CONTROL FOR ADJUSTING THE TEMPERATURE OF OVEN A701. THIS IS A FACTORY ADJUSTMENT ONLY.

*Figure 5-52. Crystal Oscillator, Oven Oscillator-Amplifier, Functional Schematic Diagram*

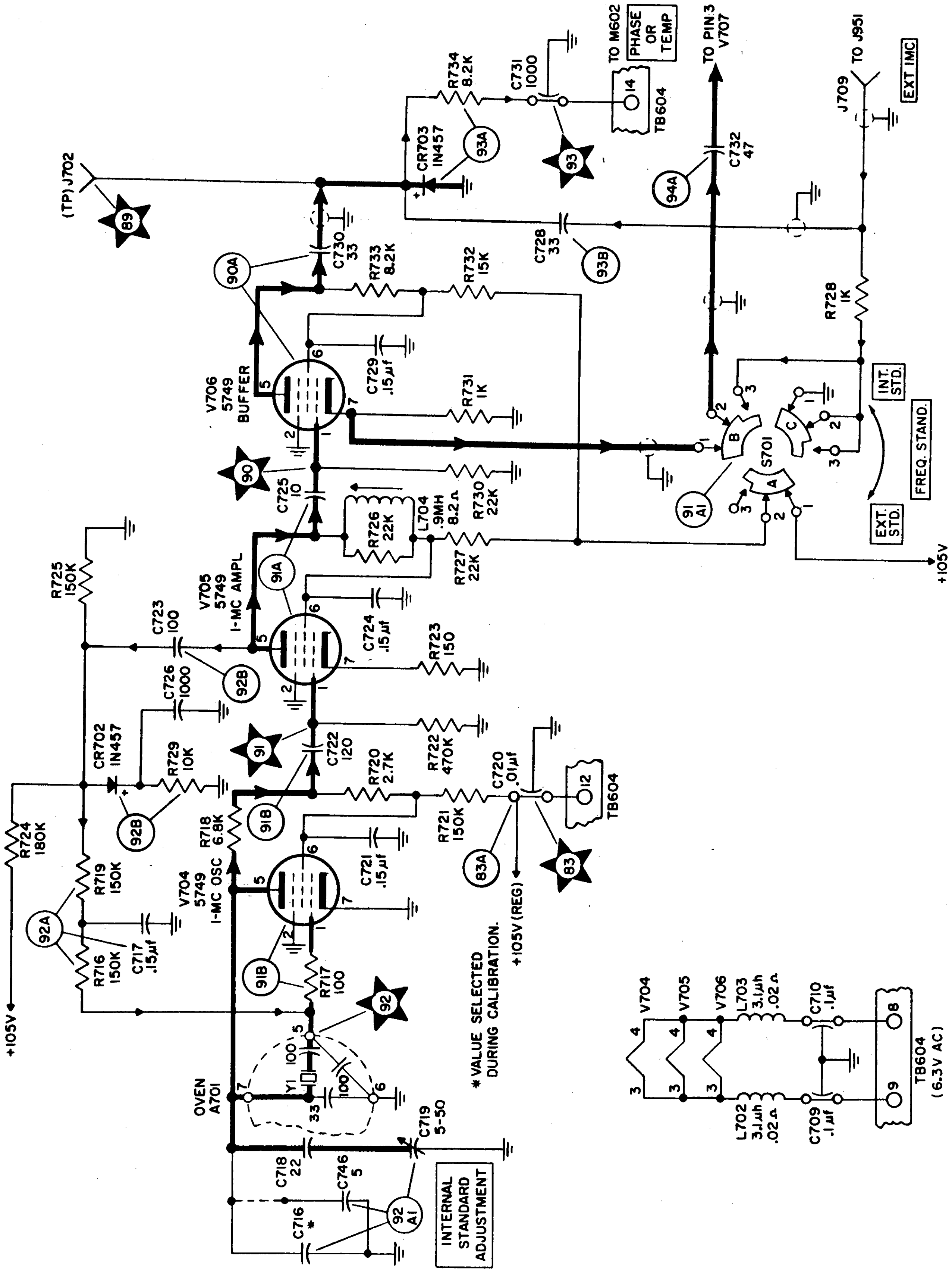

*Figure 5-53. Crystal Oscillator, Crystal Oscillator-Amplifier, Functional Schematic Diagram*

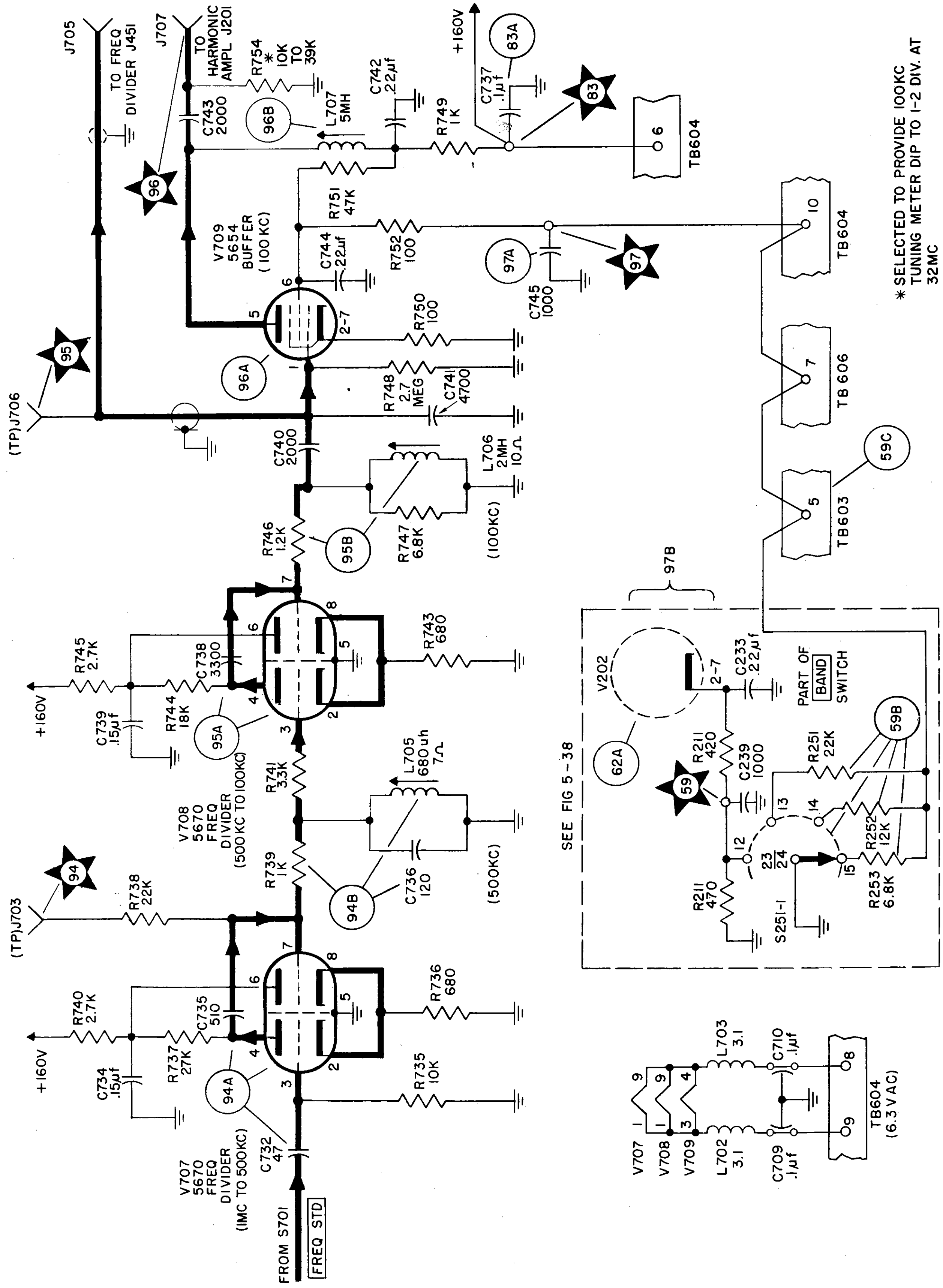

* SELECTED TO PROVIDE 100KC TUNING METER DIP TO 1-2 DIV. AT 32MC

Figure 5-54. Crystal Oscillator, Frequency Divider, Functional Schematic Diagram *b.* ACCESS.—The crystal oscillator subassembly is located in the upper converter deck. For access to the top, simply open the converter drawer; for access to the bottom, raise the upper deck. Figure 5-55 shows the location of parts.

Opening the converter drawer breaks the signal circuits by parting the connection at the rear of the drawer. To restore them, raise the converter drawer to its 90° index position and connect patch cable W624 between connectors P601, at the rear of the converter drawer, and J951, on the converter blister. Plate and filaments supply voltages are not affected by opening the drawer.

## WARNING

Potentials up to 210 volts rms are present in the power-supply circuits. Avoid contact.

*c.* PRELIMINARY CHECK.—Before trouble-shooting the crystal oscillator subassembly, check the following with the power off.

(1) Seating of tubes V701 through V709 in their sockets

(2) Cable connections at J705, J707, J708, and J709

(3) All soldered connections at feed-through terminals

(4) Mechanical operation of FREQ. STANDARD and TUNING controls.

*d.* TEST EQUIPMENT AND SPECIAL TOOLS.—Use Multimeter AN/PSM-4B, VTVM ME-30/U and ME-6D/U, and Oscilloscope OS-8C/U, or their equivalents. Special tools are not required.

*e.* CONTROL SETTING.—Set the controls to the positions shown in table 5-2. Exceptions are given in the steps involved. Place POWER switch to the ON position and allow at least 30 seconds for warm-up.

*f.* CRYSTAL OSCILLATOR TROUBLE-SHOOTING CHART.—Table 5-14 is a trouble-shooting chart for the crystal oscillator. It includes initial measurements of power-supply voltages and stage-by-stage signal

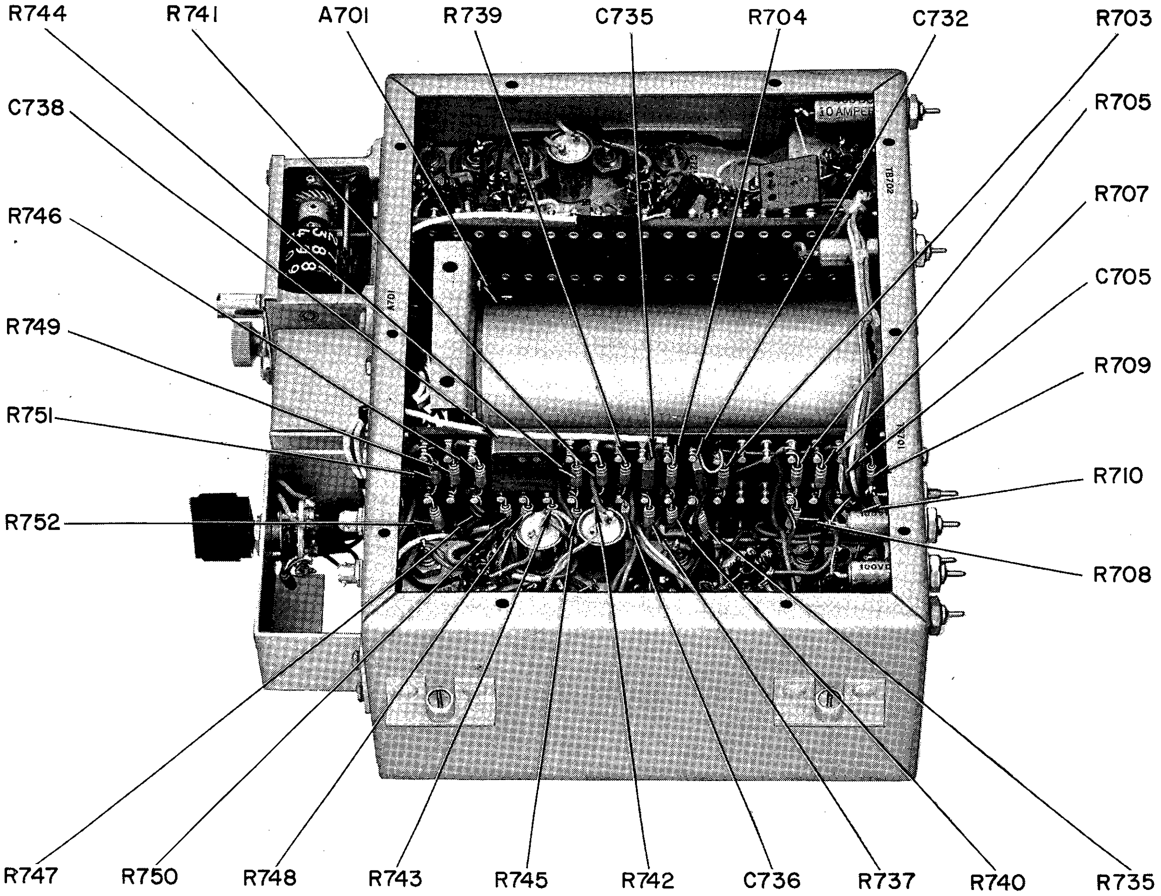

*Figure 5-55. Crystal Oscillator, Location of Parts (Sheet 1 of 3)*

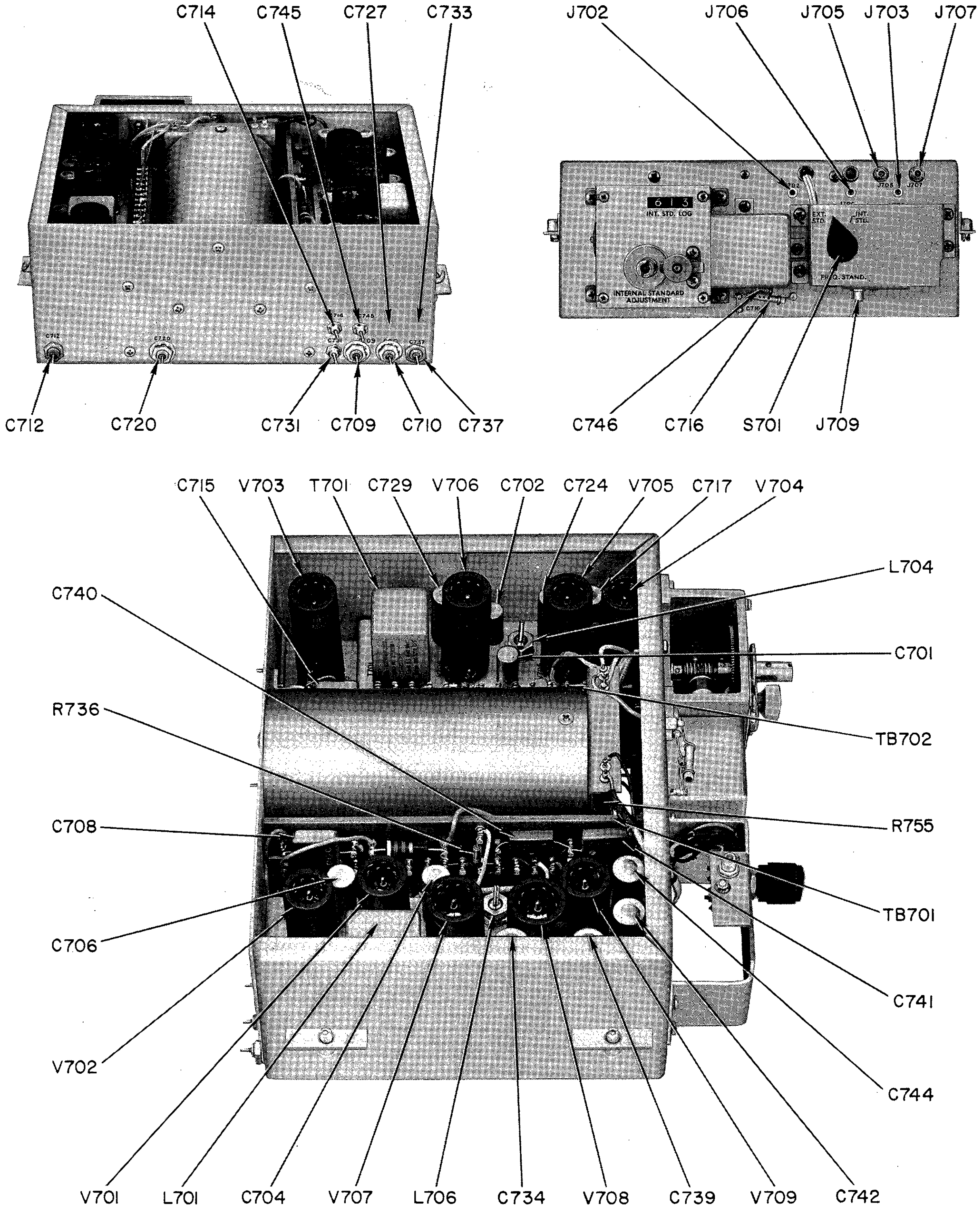

*Figure 5-55. Crystal Oscillator, Location of Parts (Sheet 2 of 3)*

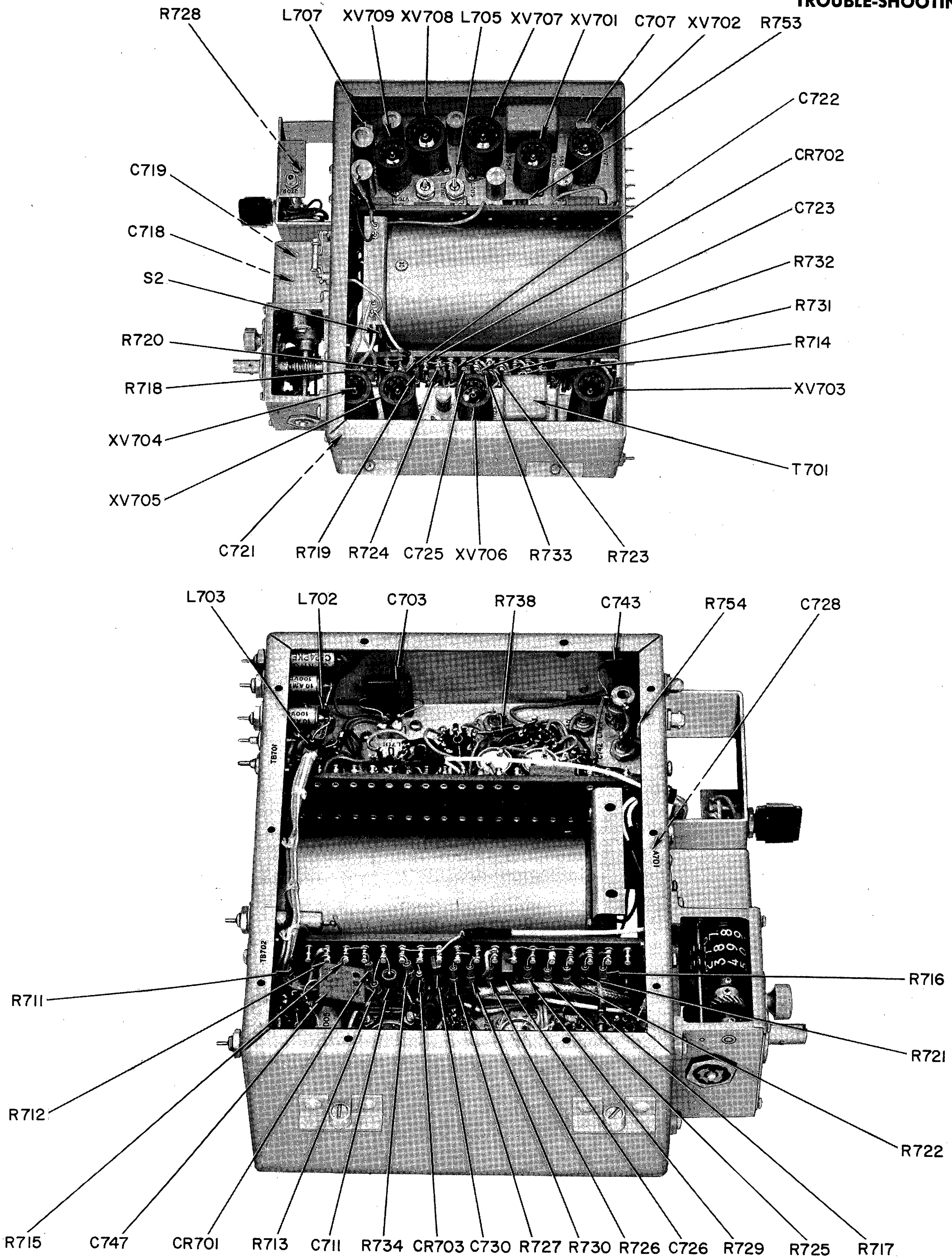

*Figure 5-55. Crystal Oscillator, Location of Parts (Sheet 3 of 3)*

## TABLE 5-14. CRYSTAL OSCILLATOR, TROUBLE-SHOOTING CHART

| STEP | TEST POINT | PRELIMINARY ACTION | NORMAL INDICATION | NEXT STEP |
|---|---|---|---|---|
| 1 | 82<br>82A<br>83<br>Figs. 5-51 to 5-56 | Connect multimeter between chassis and feed-through capacitors. Select 200 vdc range tolerance ±20%. | C712: +175 vdc | If indication is abnormal, perform steps in table 5-5. Check C712.<br>WARNING<br>Turn off power before making ohmmeter measurements. |
| | | | C737: +160 vdc | See above; check C706, C734, C737, C739 and C742. |
| | | | C720: +105 vdc ±10% tol. | See above; check C720. |
| 2 | 85<br>Figs. 5-52 5-55 5-56 | Measure 2 kc (approx) oven amplifier feedback signal. Value is high with cold oven and decreases during first hour of operation. Use VTVM. | V701 pin 1: 1.5 to 2.0 vac (cold) | If indication is abnormal, perform step 3; if normal, proceed to step 5. (Normal oven operation is indicated also by a half scale reading on the PHASE OR TEMP. meter with INT. STD. switch in the TEMP. position.) |
| | | | V701 pin 1: .005 to .01 vac (hot) | |
| 3 | 86<br>86B<br>Fig. 5-52 Table 6-7<br>87 | Measure oven heater voltage at T701 with VTVM ME-30/U. | T701 terminal 6: 6 to 7 vac (cold) | If indication is abnormal, check V701, V702, and V703. Check socket pin voltages. Check T701, C708, and C705. |
| | | | T701 terminal 5: 8 to 9 vac (cold) | |
| 4 | 88<br>88A<br>88B<br>Figs. 5-52 5-55 5-56 | If PHASE or TEMP. meter M602 does not indicate and oven operation is normal, measure meter operating voltage at feed-through capacitor C714 with multimeter. Place switch S602 in the TEMP. position. | C714: .125 vdc (approx for one-half scale meter reading) | If indication is abnormal, check CR701, C711, R713, R714, R715, and C714. If normal but meter M602 does not indicate, replace meter; check switch S602. |

## TABLE 5-14. CRYSTAL OSCILLATOR, TROUBLE-SHOOTING CHART (cont)

| STEP | TEST POINT | PRELIMINARY ACTION | NORMAL INDICATION | NEXT STEP |
|---|---|---|---|---|
| 5 | 89<br>90<br>91<br>92<br>Figs.<br>5-53<br>5-55<br>5-56<br>Table<br>6-7 | Measure 1 mc signal at TP J702 with VTVM ME-30/U. Place FREQ. STAND. switch S701 to the INT. position. | TP J702: .3 to .7 vac | If indication is abnormal, check V704, V705, and V706. Check socket pin voltages. Check for signal at pin 1 of each tube. Check CR702 and feedback network. |
| 6 | 94<br>94A<br>91A<br>Figs.<br>5-54<br>5-55<br>5-56<br>Table<br>6-7 | Measure 500 kc signal at TP J703 with VTVM ME-30/U. (Test point is located on panel.) Connect Y axis of oscilloscope to TP J703, X axis to TP J702. Note Lissajou pattern.<br>NOTE: FREQ. STAND. switch S701 must be in INT. position for this test. | TP J703: .3 to .7 vac<br>Lissajou: 2 to 1 ratio | If indication is abnormal, replace V707. Check socket pin voltages. Check R732, C735, and S701. If Lissajou pattern is wrong, refer to crystal oscillator alignment instructions in Section 6. |
| 7 | 95<br>95A<br>95B<br>Fig.<br>5-54 | Measure 100 kc signal at TP J706 with VTVM ME-30/U. Connect Y axis of oscilloscope to TP J706, X axis to TP J703. Note Lissajou pattern. (Remove cable W615 at J705.) | TP J706: 1.4 to 1.7 vac<br>Lissajou: 5 to 1 ratio | If indication is abnormal, replace V708. Check socket pin voltages. Refer to Section 6 for crystal oscillator alignment instructions. |
| 8 | 96<br>96A<br>96B<br>Fig.<br>5-54 | Measure 100 kc signal at connector J707 with VTVM ME-30/U. (Remove cable W622 from J707.) | J707: 25 to 30 vac | If indication is abnormal, replace V709. Check socket pin voltages. Check C743, C740, and C741. Refer to Section 6 for crystal oscillator alignment instructions. |

## TABLE 5-14. CRYSTAL OSCILLATOR, TROUBLE-SHOOTING CHART (cont)

| STEP | TEST POINT | PRELIMINARY ACTION | NORMAL INDICATION | NEXT STEP |
|---|---|---|---|---|
| 9 | ☆97<br>97A<br>97B<br>Figs.<br>5-54<br>5-39 | If step 8 tests are still abnormal, measure V709 screen supply voltage at feed-through capacitor C745 with VTVM. Select dc range. Note voltage reading for each position of the BAND switch. | C745: 20 vdc (approx) on BAND 1, increasing progressively to 60 vdc (approx) on BAND 4 ±20% tol. | If indication is abnormal, refer to table 5-11 and check resistors selected by switch section S251-1 (in the harmonic amplifier circuit). |
| 10 | ☆93<br>93A<br>Figs.<br>5-53<br>5-55<br>5-56 | To test the PHASE or TEMP. meter circuit with switch S602 in the PHASE position, measure meter operating voltage at feed-through capacitor C731 with VTVM. Select dc range. (FREQ. STAND. switch must be in the INT. position for this test. An external signal at J709 is not required.) | C731: .08 to .1 vdc for approximately one-third scale meter indication. | If indication is abnormal, check CR703, R734, and C731. If normal but meter does not indicate, replace meter and check switch S602.<br>NOTE: Replace all interconnecting cables that were removed in the previous steps. |
| 11 | 92A1<br>Figs.<br>5-53<br>5-55<br>5-56<br>3-1 | When checking the frequency of the crystal oscillator with a primary frequency standard, if an adjustment cannot be made because the INT. STD. LOG reads 000, connect C746 in parallel with C716 by adding a short jumper. (These capacitors are located on the crystal oscillator subassembly.) | Frequency correction of the crystal oscillator can be made by adjusting the INTERNAL STANDARD ADJUSTMENT control. INT. STD. LOG reads between 600 and 900. | NOTE: This step is usually required only after appreciable equipment service and is intended to compensate for normal aging of the 1 mc crystal in oven assembly A701. |

tracing. Perform the steps in the order shown. Compare the result of each step with the information in the NORMAL INDICATION column and follow the instructions given in the NEXT STEP column. Figure 5-56 shows the location of test points, and table 6-7 provides voltage and resistance measurements for tube sockets in the subassembly.

## 5-19. FREQUENCY DIVIDER.

*(See figure 5-57.)*

*a.* FUNCTION.—The frequency divider further divides the 100 kc output signal of the crystal oscillator to 20 kc for operation of the synthesizer circuits. Faulty operation of the frequency divider can disable the receiver by preventing or hindering synthesizer production of the 80 kc carrier insertion signal, the 1 kc incremental pips or formation of the 80 kc third conversion frequency.

*b.* ACCESS.—The frequency divider is located in the lower converter deck. Figure 5-58 shows the location of parts.

*c.* PRELIMINARY CHECK.—Before trouble-shooting the frequency divider, first inspect the following with the power off:

(1) Seating of tubes V451, V452, and V453 in their sockets

(2) Cable connections at J451 and J455

(3) Soldered connections at chassis feed-through terminals.

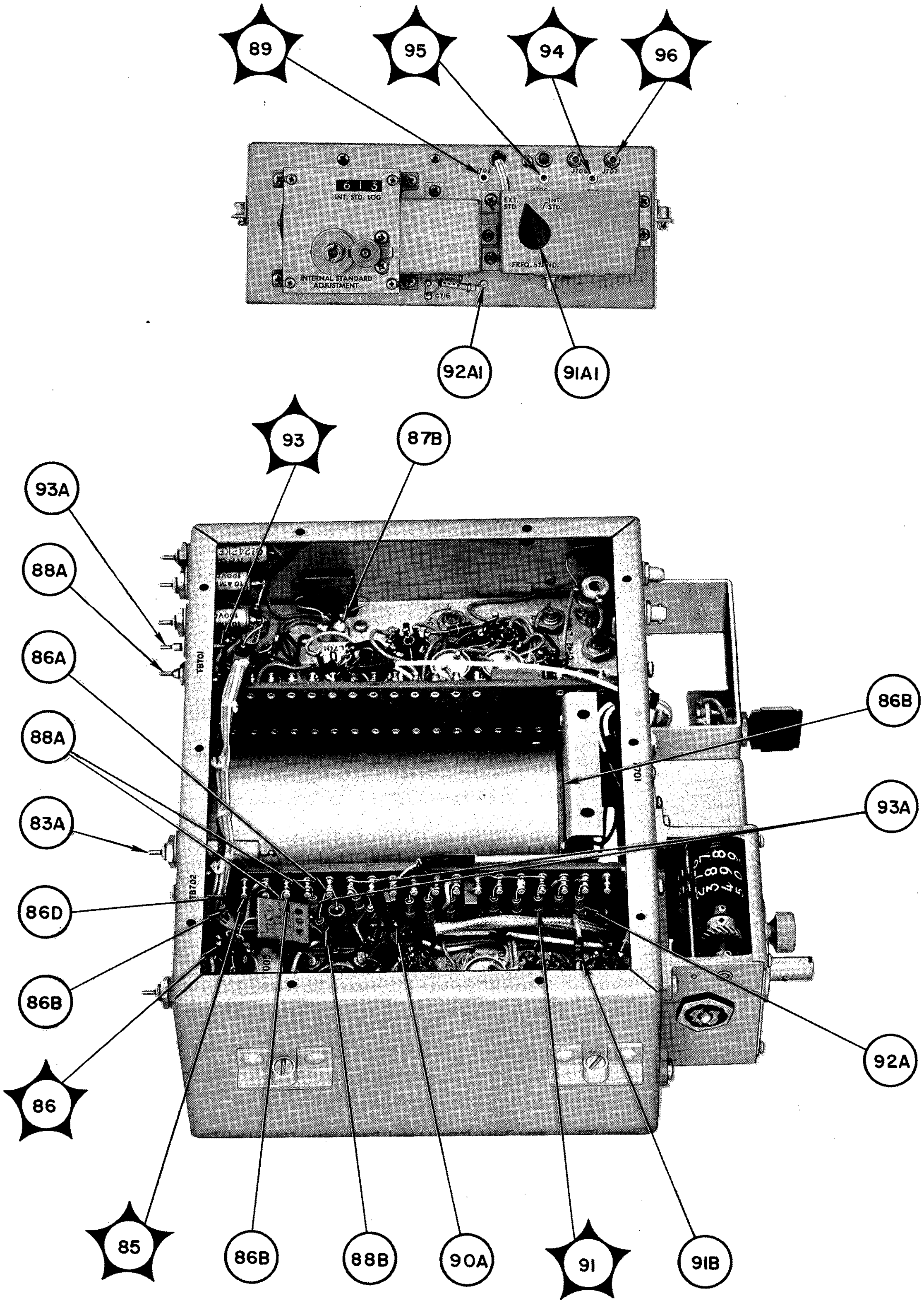

Figure 5-56. Crystal Oscillator, Location of Test Points
(Sheet 1 of 3)

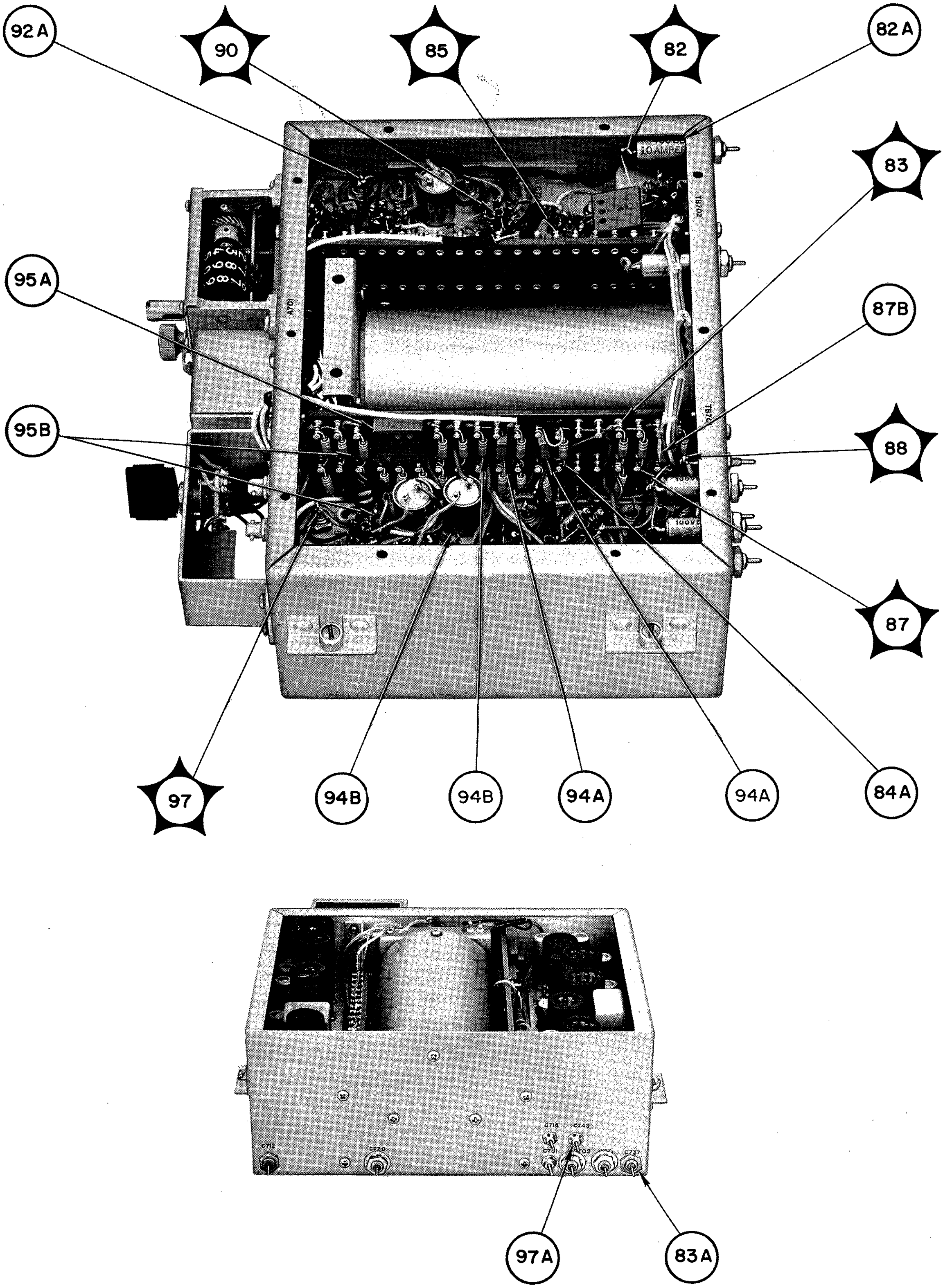

*Figure 5-56. Crystal Oscillator, Location of Test Points (Sheet 2 of 3)*

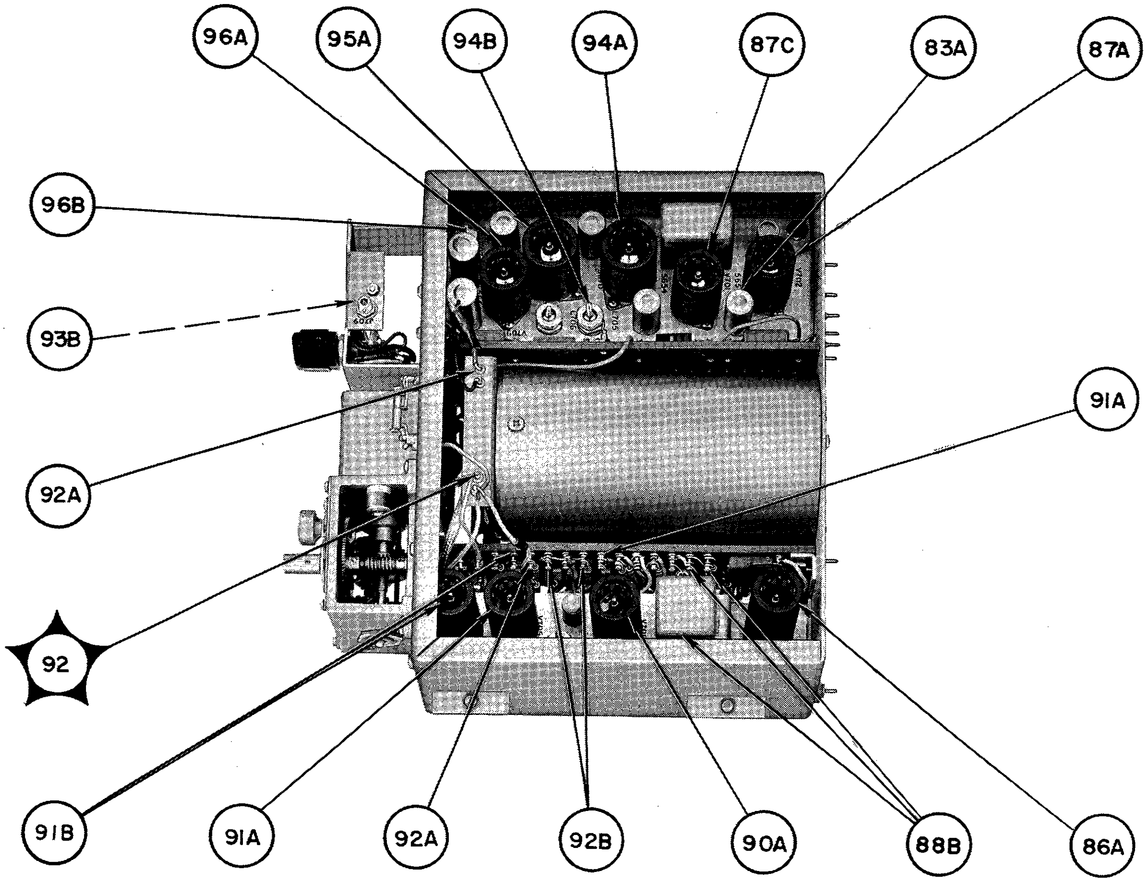

*Figure 5-56. Crystal Oscillator, Location of Test Points (Sheet 3 of 3)*

## WARNING

Potential as high as 210 volts rms are present in the power supply circuit. Avoid contact.

*d.* TEST EQUIPMENT AND SPECIAL TOOLS.—Use Multimeter AN/PSM-4B, VTVM ME-30/U, Signal Generator AN/URM-25D and Oscilloscope OS-8C/U. Special tools are not required.

*e.* CONTROL SETTINGS.—Preset all panel controls as shown in table 5-2. Place POWER switch to the ON position and allow at least 30 seconds for warm-up.

*f.* FREQUENCY DIVIDER TROUBLE-SHOOTING CHART.—Table 5-15 lists the steps for trouble-shooting the frequency divider. Perform them in the order given. Figure 5-57 is the functional schematic diagram of the frequency divider, and figure 5-59 shows the location of test points. Table 5-66 gives voltage and resistance values at the socket pins of tubes V451, V452, and V453. To reach these, take the frequency divider subassembly out of the drawer and remove the cover plate from the bottom. Refer to Section 6 for removal instructions.

### 5-20. SYNTHESIZER.

*a.* FUNCTION.—The synthesizer provides an 80 kc signal to the upper- and lower-sideband detector- amplifiers for carrier injection, a 1 kc pip spectrum for incremental tuning, and a 140 kc signal for continuous tuning. Failure to supply any of these can disable the receiver.

*b.* DIAGRAMS.—For a complete schematic diagram of the synthesizer subassembly, refer to figure 6-17. This paragraph contains the following diagrams related to the synthesizer:

| *Figure* | *Circuit* |
|---|---|
| 5-60 | Functional block diagram |
| 5-61 | Harmonic generator |
| 5-62 | Frequency divider |
| 5-63 | Pulse shaper-blocking oscillator |
| 5-64 | Injection mixer-amplifier |

*c.* ACCESS.—The synthesizer is located in the upper converter deck. To restore signal circuits broken by the

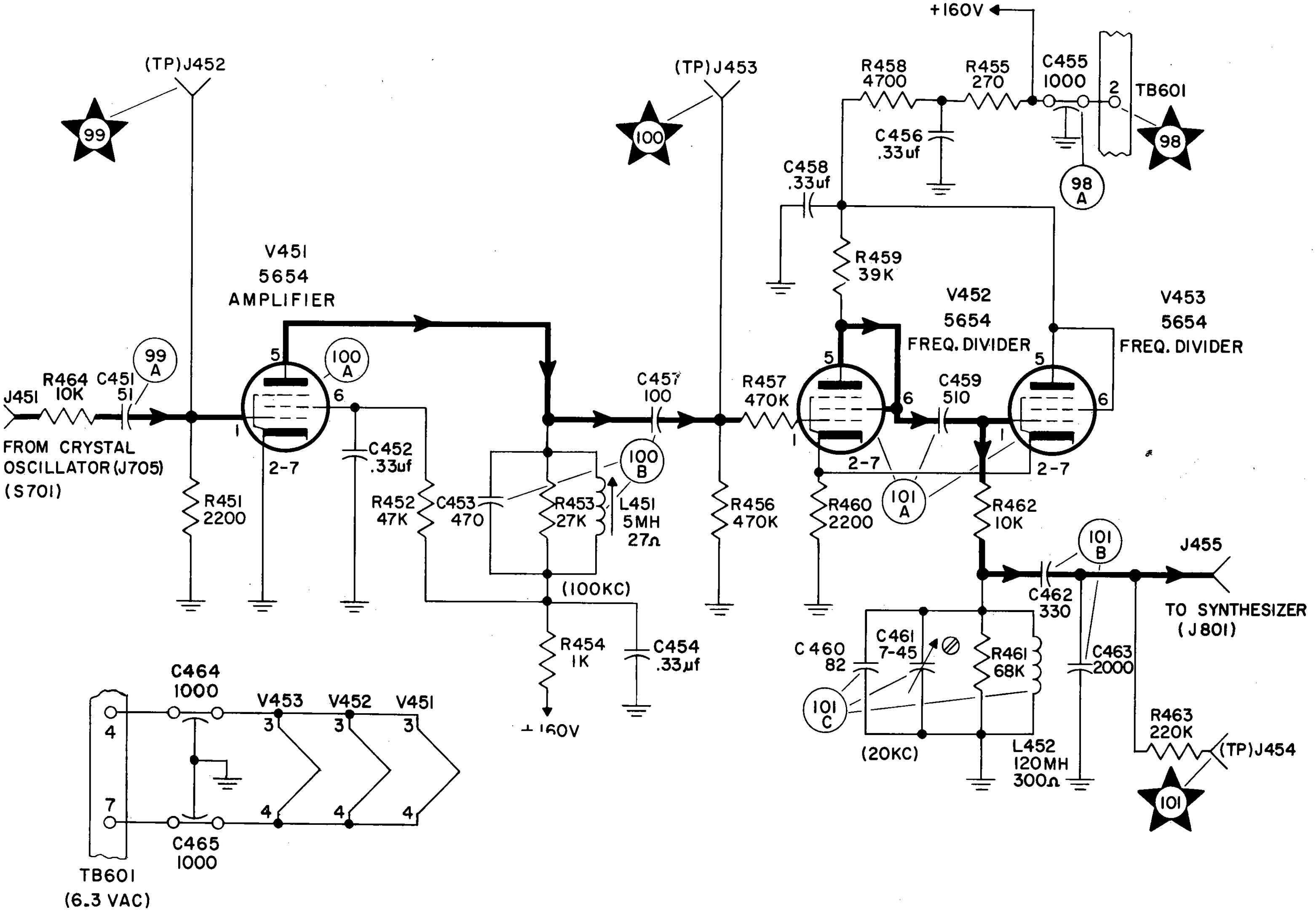

*Figure 5-57. Frequency Divider, Functional Schematic Diagram*

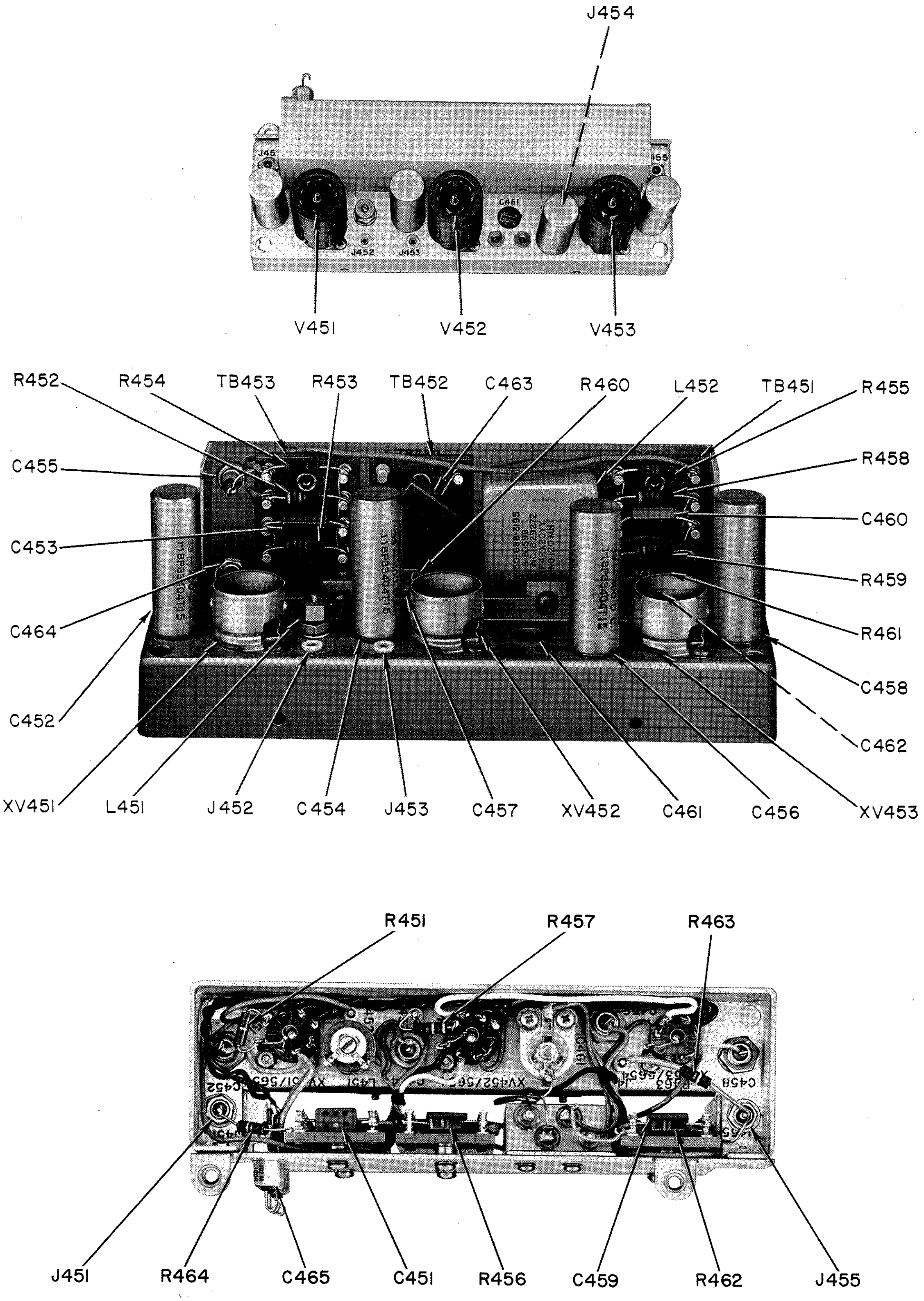

*Figure 5-58. Frequency Divider, Location of Parts*

## TABLE 5-15. FREQUENCY DIVIDER, TROUBLE-SHOOTING CHART

| STEP | TEST POINT | PRELIMINARY ACTION | NORMAL INDICATION | NEXT STEP |
|---|---|---|---|---|
| 1 | ★98<br>98A<br>Figs.<br>5-57<br>5-58<br>5-59 | Connect the multimeter between the chassis and feed-through capacitor C455. Select the 200 v range. Tolerance ±20%. | C455: +160 vdc | If indication is abnormal, refer to table 5-5. Check C454, C455, C456, and C458.<br>WARNING<br>Turn off power before making ohmmeter measurements. |
| 2 | ★99<br>★100<br>99A<br>100A<br>100B<br>Figs.<br>5-57<br>5-58<br>5-59<br>Table<br>6-6 | Disconnect plugs P451 and P455 from J451 and J455. Connect signal generator to J451 and adjust for a 100 kc 1.0 vac output. Measure signal at TP J453 with VTVM. Connect Y axis of oscilloscope to TP J453, X axis to TP J452 and note Lissajou pattern. | TP J453: 2.7 to 3.2 vac<br>Lissajou: 1 to 1 ratio | If indication is abnormal, replace V451. Check socket pin voltages. Check C451 and C457. Refer to section 6 for frequency divider alignment instructions. |
| 3 | ★101<br>101A<br>to<br>101C<br>Figs.<br>5-57<br>5-58<br>5-59<br>Table<br>6-6 | With signal generator at J451 and adjusted as in step 2, measure signal at TP J454 with VTVM. Connect Y axis of oscilloscope to TP J454, X axis to TP J452. Note Lissajou pattern. | TP J454: 1.3 to 1.7 vac<br>Lissajou: 5 to 1 ratio | If indication is abnormal, check V452 and V453. Check socket pin voltages. Check C459, C462, and C463. Refer to Section 6 for frequency divider alignment instructions. |

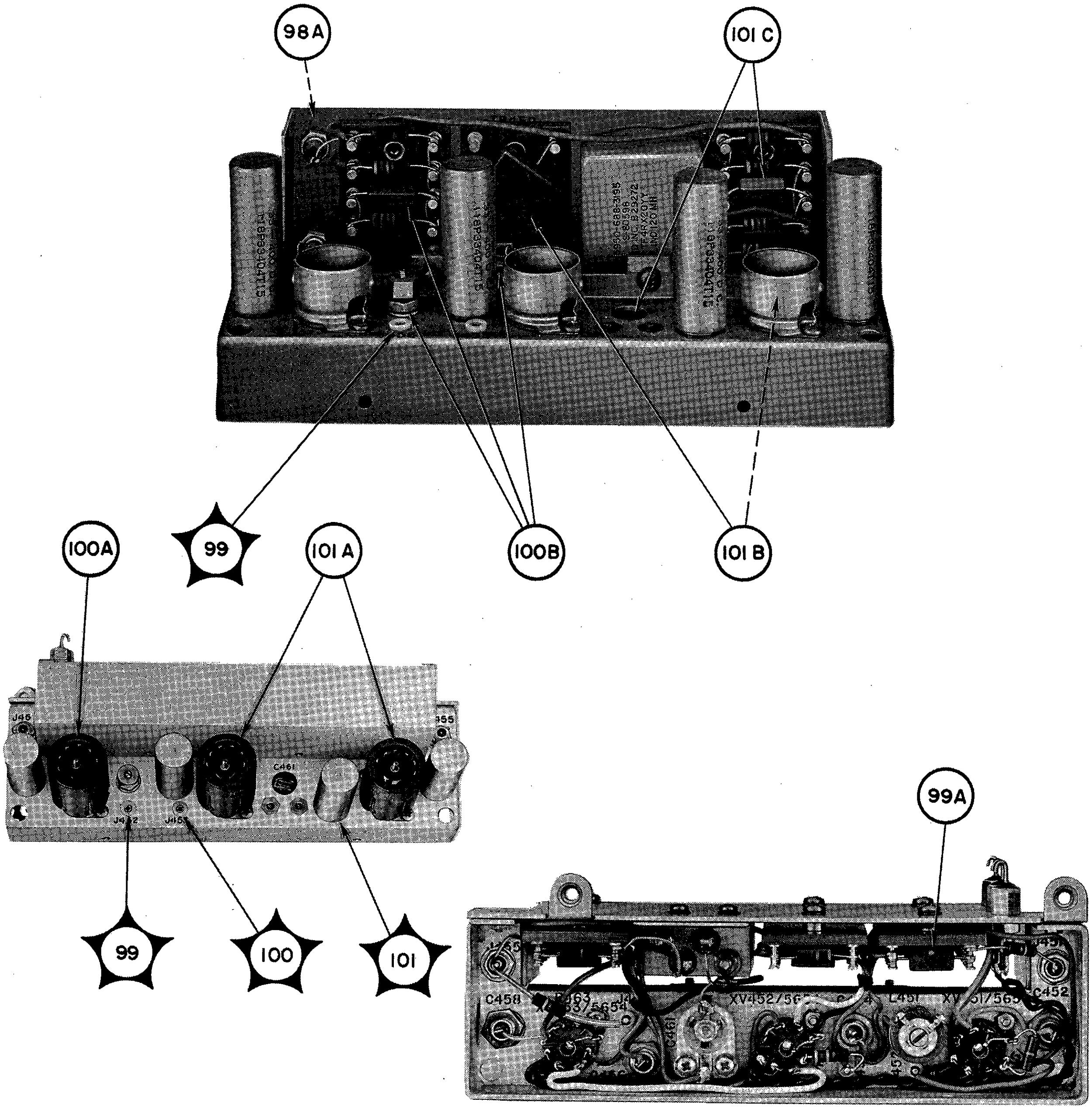

Figure 5-59. Frequency Divider, Location of Test Points

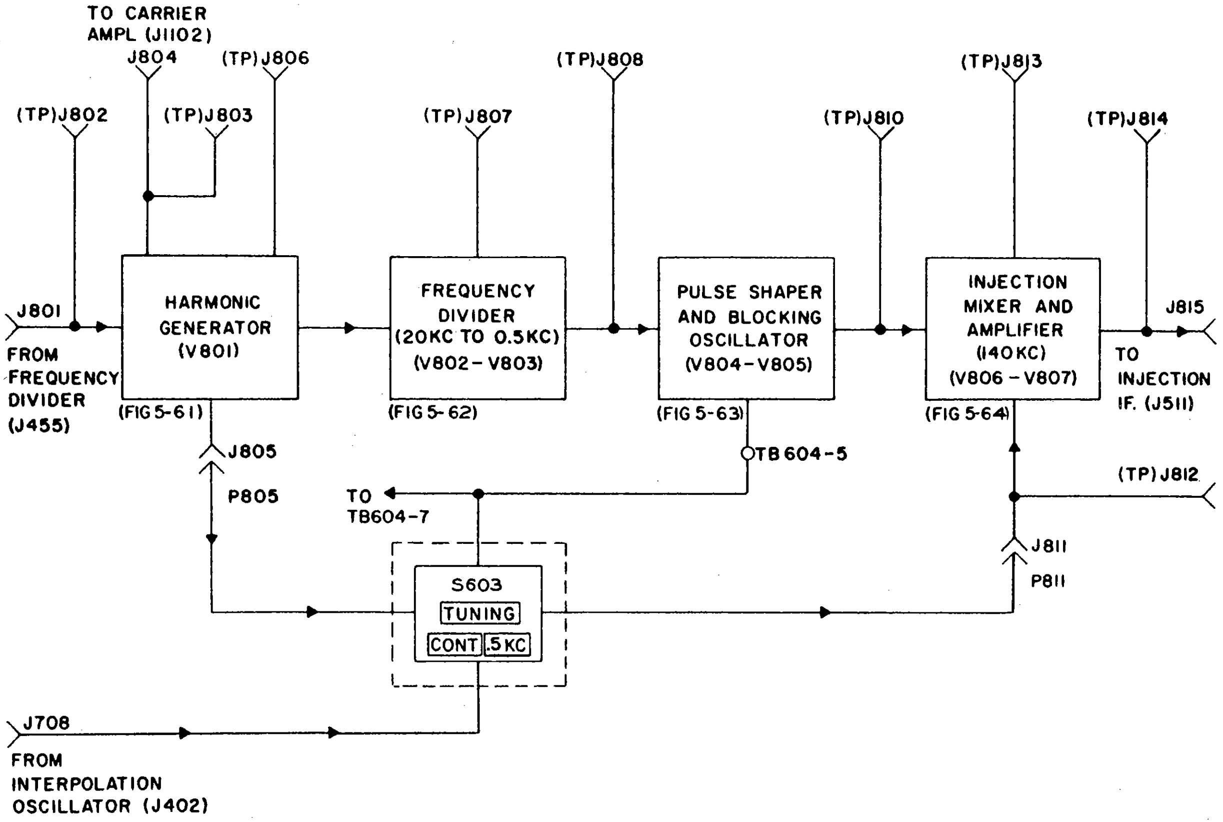

*Figure 5-60. Synthesizer, Functional Block Diagram*

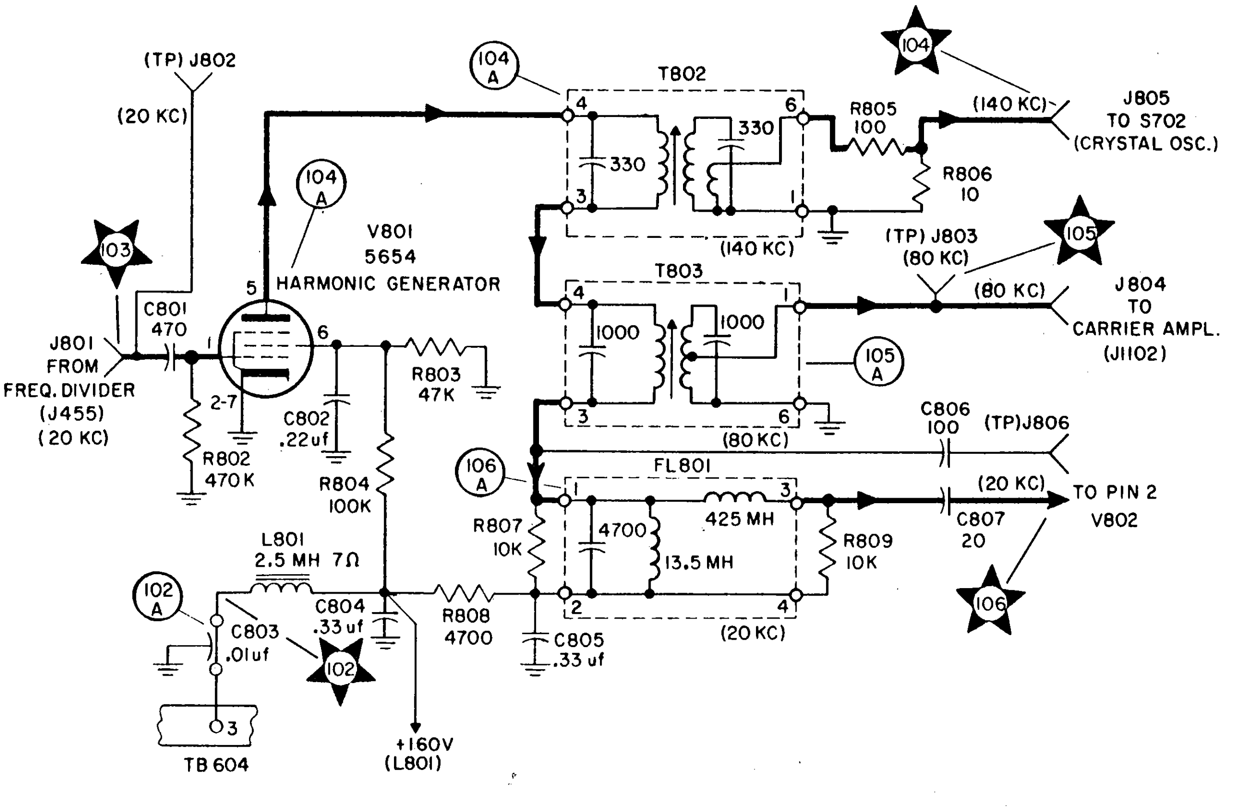

*Figure 5-61. Synthesizer, Harmonic Generator, Functional Schematic Diagram*

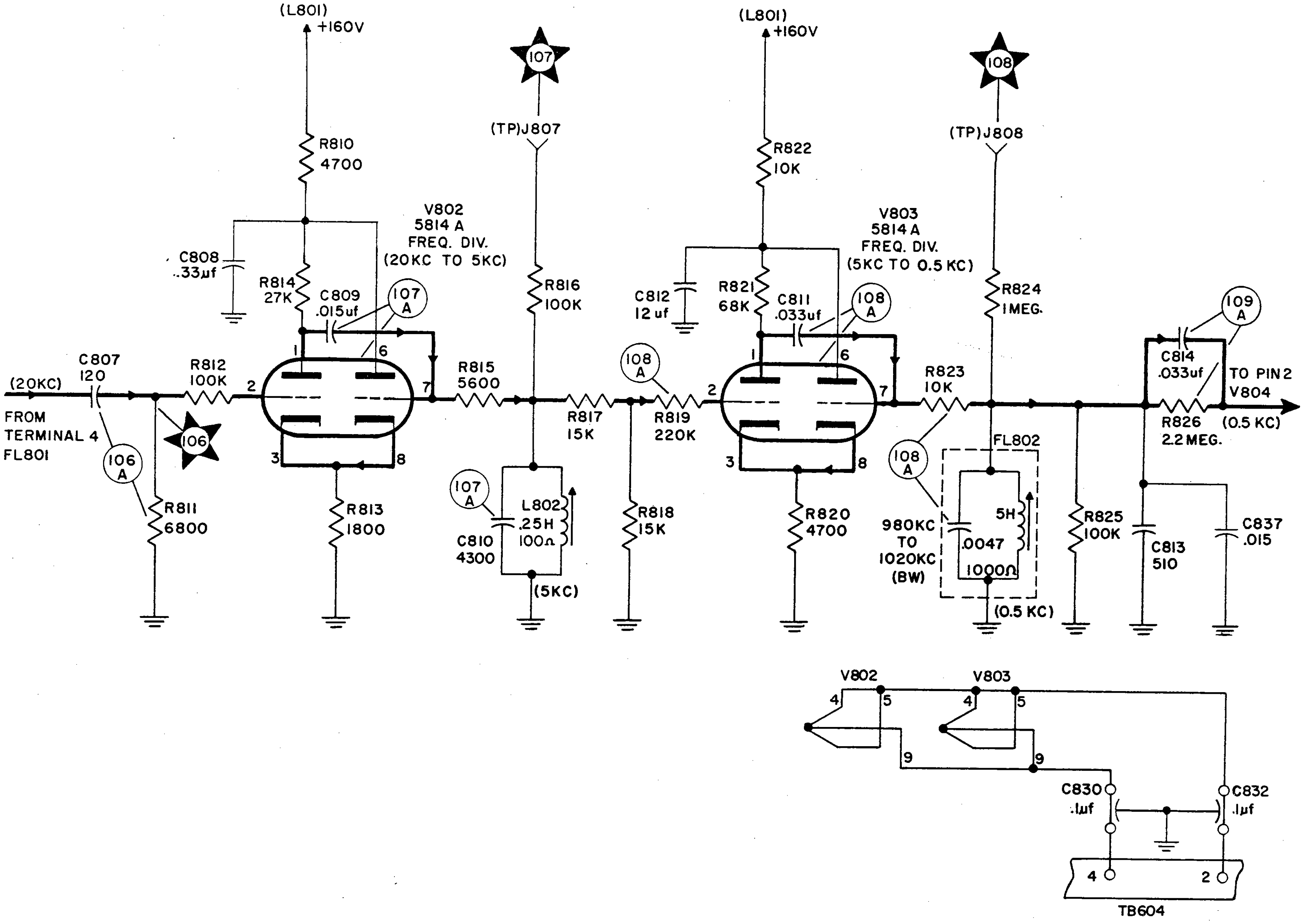

Figure 5-62. Synthesizer, Frequency Divider, Functional Schematic Diagram

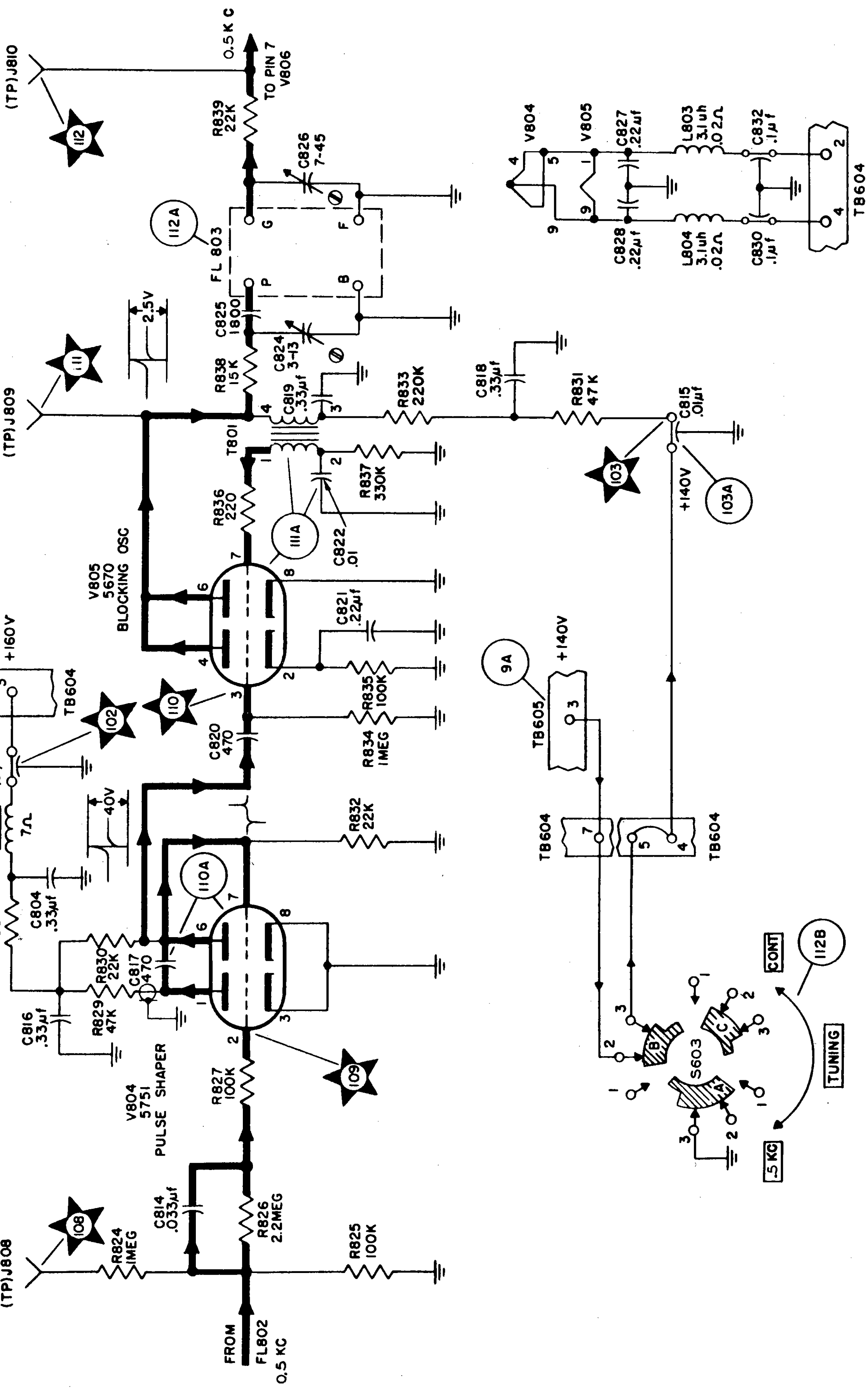

Figure 5-63. Synthesizer, Pulse Shaper and Blocking Oscillator, Functional Schematic Diagram

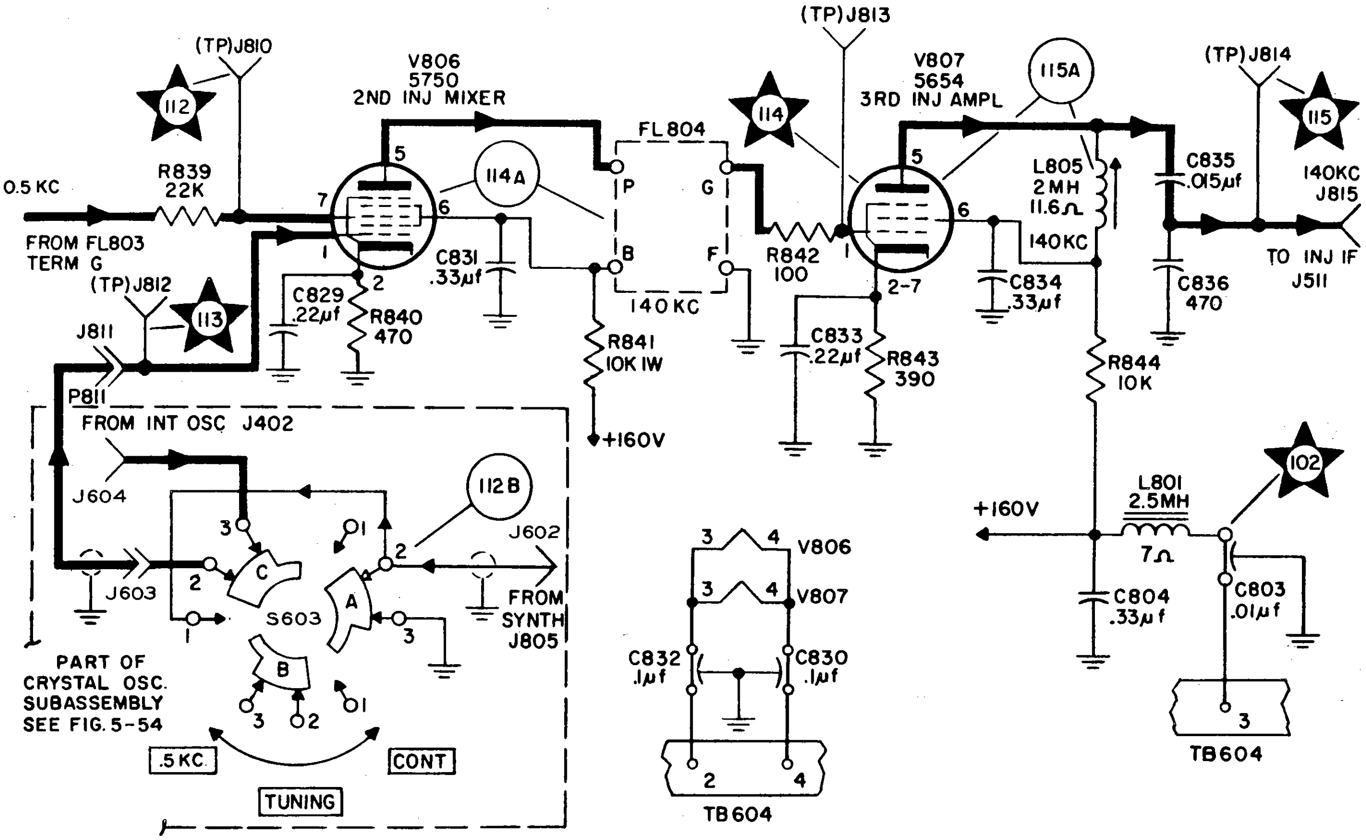

*Figure 5-64. Synthesizer, Injection Mixer-Amplifier (140 Kc), Functional Schematic Diagram*

opening of the converter drawer, attach patch cable W624 between connectors P601 on the rear of the converter drawer and J951 on the converter blister. For convenience in reaching the connectors, raise the drawer to its vertical position. Figure 5-65 shows the location of synthesizer parts.

*d.* PRELIMINARY CHECK.—Before trouble-shooting the synthesizer, check the following, with the power off:

(1) Seating of tubes V801 through V807 in their sockets

(2) Cable connections at J801, J804, J805, J811, and J815

(3) All soldered connections at chassis feed-through terminals

(4) Normal mechanical function of TUNING switch S702.

*e.* TEST EQUIPMENT AND SPECIAL TOOLS.—Use Multimeter AN/PSM-4B, VTVM ME-6D/U, VTVM ME-30/U, Signal Generator AN/URM-25D and Oscilloscope OS-8C/U, or equivalents. No special tools are required.

*f.* CONTROL SETTINGS.—Place the panel controls in the positions listed in table 5-2. Place POWER switch to the ON position and allow 30 seconds for warm-up.

*g.* SYNTHESIZER TROUBLE-SHOOTING CHART.—Table 5-16 lists the steps for measuring supply voltages and stage-by-stage signal tracing in the synthesizer. Compare the results with those listed in the NORMAL INDICATION column and follow the instructions given in the NEXT STEP column. Figure 5-66 shows the location of test points. Table 6-7 gives values for voltage and resistance measurements.

## 5-21. LSB DETECTOR-AMPLIFIER.

*a.* DIAGRAMS.—Figure 5-67 is a functional block diagram of the LSB detector-amplifier assembly. For a complete schematic diagram, refer to figure 6-19. Functional schematic diagrams of the individual circuits in the assembly are as follows:

| *Figure* | *Circuit* |
|---|---|
| 5-68 | 82 kc IF amplifier |
| 5-69 | AGC amplifier |
| 5-70 | Demodulator and carrier amplifier |
| 5-71 | Audio amplifier |

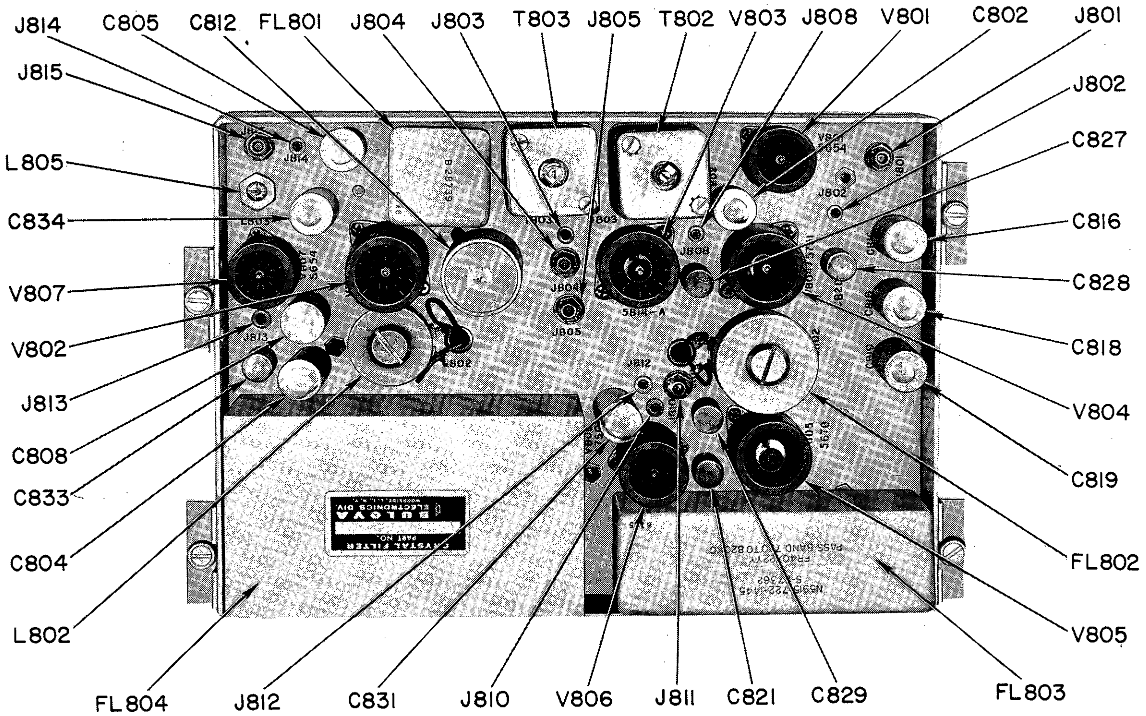

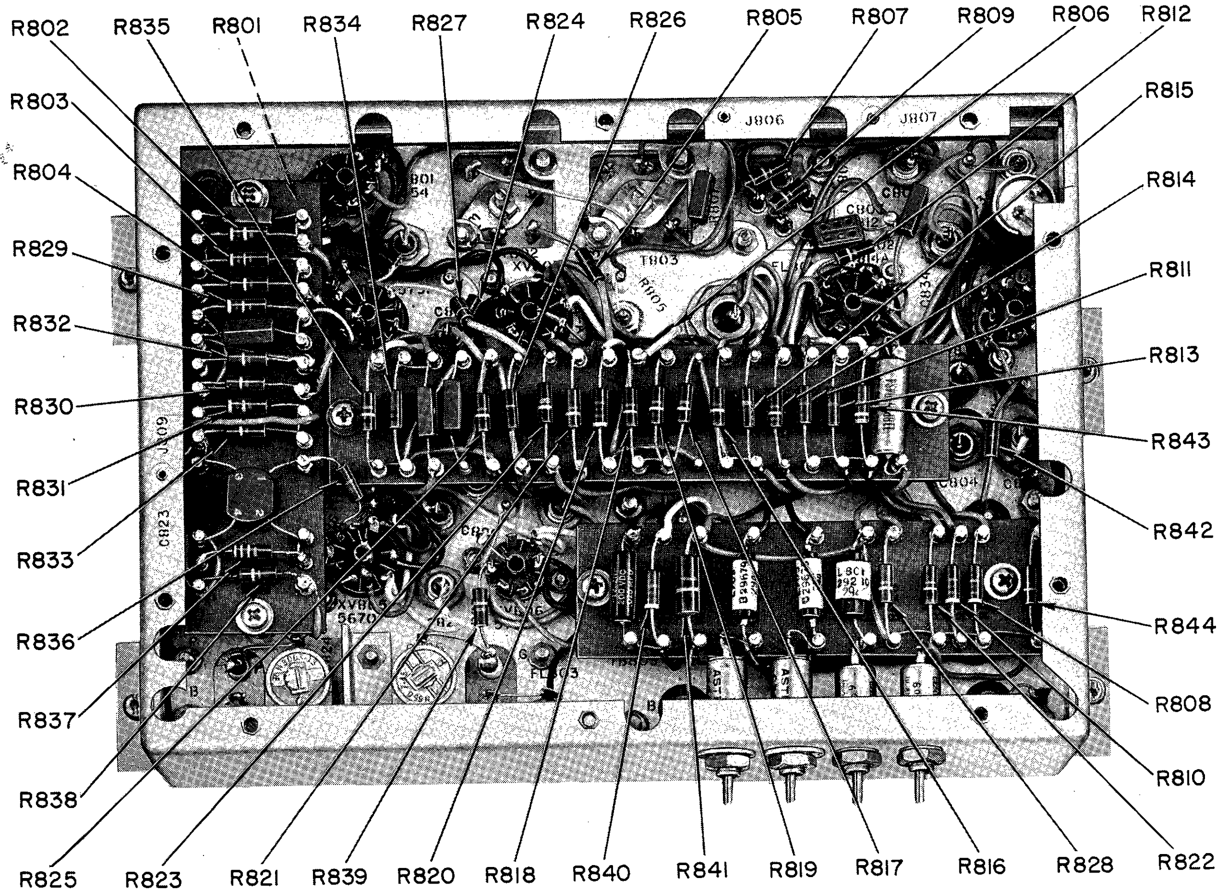

*Figure 5-65. Synthesizer, Location of Parts (Sheet 1 of 2)*

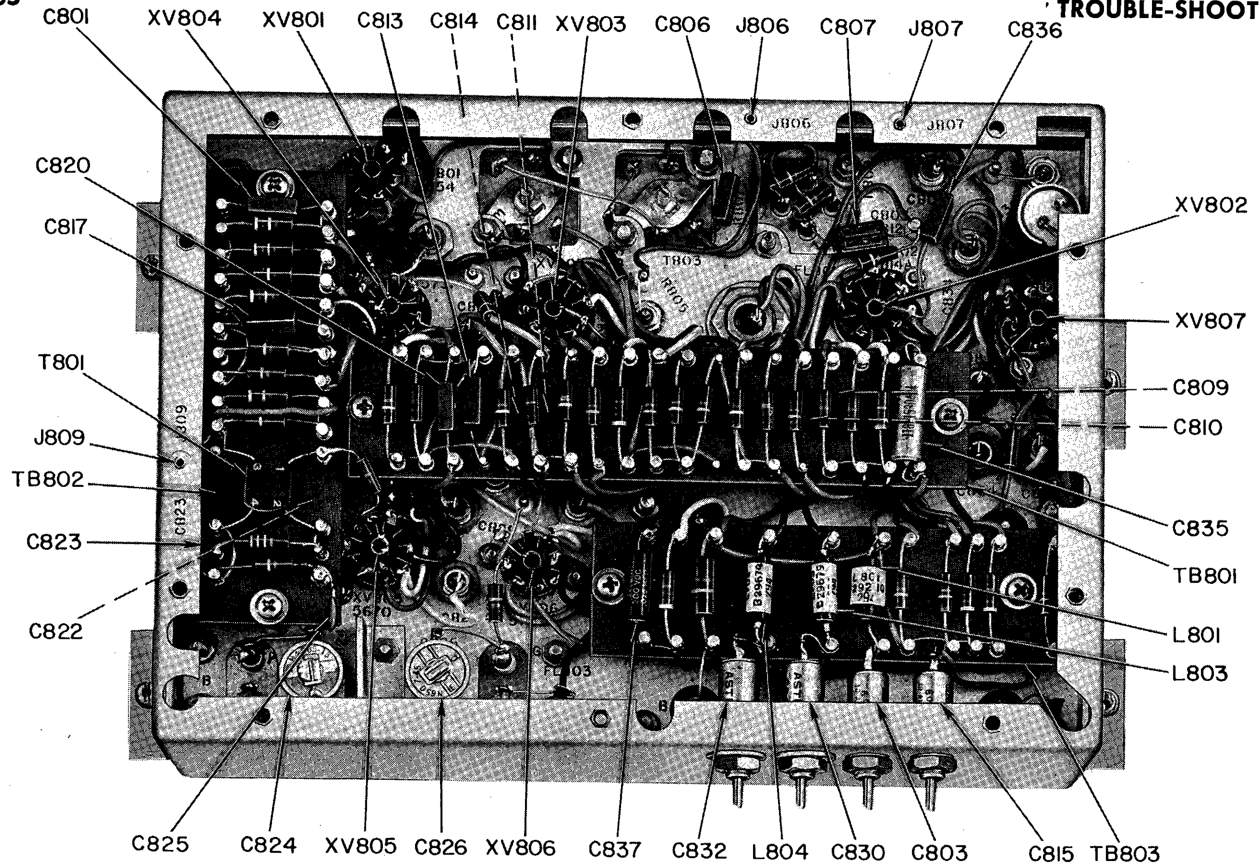

*Figure 5-65. Synthesizer, Location of Parts (Sheet 2 of 2)*

**TABLE 5-16. SYNTHESIZER, TROUBLE-SHOOTING CHART**

| STEP | TEST POINT | PRELIMINARY ACTION | NORMAL INDICATION | NEXT STEP |
|---|---|---|---|---|
| 1 | 102<br>102A<br>103<br>Figs.<br>5-60<br>5-61<br>5-65<br>5-66 | Connect multimeter between chassis and feed-through capacitors. Select the 200 vdc range; tolerance ±20%. | C803: +160 vdc | If indication is abnormal, refer to table 5-5. Check C803.<br>WARNING<br>Turn off power before making ohmmeter measurements. |
| | | | C815: +160 vdc | See above. Check C815.<br>NOTE: TUNING switch must be in the 0.5 KC position for this test. |
| 2 | 105<br>105A | Disconnect plugs P801, P815, P811, P805, and P804 from J801, J815, J811, J805, and J804. Connect signal generator to J801; adjust for a 20 kc output (800 mv). Measure signal at test points with VTVM ME-30/U. | TP J803: 1.5 to 2 vac (80 kc) | If indication is abnormal, replace V801. Check socket pin voltages. Check T803. |
| | | | J805: 0.35 vac (140 kc) | If indication is abnormal, check T802, R805, and R806. |
| | | | Junction of R811 and R812: 3.5 vac (20 kc) | If indication is abnormal, check C807, R811, and R812. Check FL801. |

## TABLE 5-16. SYNTHESIZER, TROUBLE-SHOOTING CHART (cont)

| STEP | TEST POINT | PRELIMINARY ACTION | NORMAL INDICATION | NEXT STEP |
|---|---|---|---|---|
| | 104<br>107A<br>Figs.<br>5-61<br>5-62 | | | |
| 3 | 107<br>103<br>Figs.<br>5-61<br>5-62 | Connect oscilloscope Y axis to TP J807 and X axis to TP J802. With signal generator connected as in step 2, note Lissajou pattern on oscilloscope. | Lissajou: 4.1 ratio | If indication is abnormal, replace V802. Check socket pin voltages. Refer to Section 6 for L802 synthesizer alignment instructions. Check C807 and C809. Check L802. |
| 4 | 107<br>108 | Connect oscilloscope Y axis to TP J807 and X axis to TP J808. Note Lissajou pattern. | Lissajou: 10.1 ratio | If indication is abnormal, replace V803. Check socket pin voltages. Refer to Section 6 for FL802 synthesizer alignment instructions. Check C811 and R823. |
| 5 | 110<br>110A<br>Figs.<br>5-63<br>5-65<br>5-66<br>Table<br>6-7 | Connect oscilloscope Y axis to pin 3 of V805. Adjust oscilloscope sweep for 200 cps and sync with 0.5 kc input. Note pattern of 0.5 kc pips. Connect VTVM to pin 3 of V805 and measure peak-to-peak voltage. | V805, pin 3: 40 v p/p (approximately) | If indication is abnormal, replace V804. Check socket pin voltages. Check C817 and C820. |
| 6 | 111<br>Figs.<br>5-63<br>5-65<br>5-66<br>Table<br>6-7 | Connect oscilloscope Y axis to TP J809. Adjust oscilloscope sweep for 200 cps and sync with input. Note pattern of 0.5 kc pips. Connect VTVM to TP J809. Measure peak-to-peak voltage. | TP J809: 2 to 5 v p/p (approximately) | If indication is abnormal, replace V805. Check socket pin voltages. Check T801, C819, and C822.<br>NOTE: TUNING switch must be in 0.5 KC position for this test. |
| 7 | 111<br>112<br>Figs.<br>5-63<br>5-65<br>5-66 | Remove V805 and connect the signal generator to TP J809. Adjust for a 770 kc output (2 v). Measure signal at TP J810 with VTVM ME-30/U. | TP J810: .005 to .01 vac | If indication is abnormal, check FL803, C825, and R839. Alignment instructions for FL803 are given in Section 6. |

**TABLE 5-16. SYNTHESIZER, TROUBLE-SHOOTING CHART (cont)**

| STEP | TEST POINT | PRELIMINARY ACTION | NORMAL INDICATION | NEXT STEP |
|---|---|---|---|---|
| 8 | 113<br>115<br>114A<br>115A<br>Figs.<br>5-64<br>5-65<br>5-66<br>Table<br>6-7 | Replace V805 and connect the signal generator to TP J812. Adjust for a 580 kc output (2 v). Measure signal at TP J814 with ME-30/U while slowly tuning the generator between 580 and 680 kc. | TP J814: 2 to 5 vac. VTVM should peak at each 0.5 kc change in the signal generator tuning. (Signal frequency is 140 kc.) | If indication is abnormal, check V806 and V807. Check socket pin voltages. Check FL804. Alignment instructions for L805 are given in Section 6. |

*b.* ACCESS.—The LSB detector-amplifier is located in the lower demodulator deck. Raise the upper deck for access to the top; tilt the whole drawer for access to the bottom. Figure 5-72 shows the location of parts and figure 5-73 the location of test points.

*c.* PRELIMINARY CHECK.—Before trouble-shooting the LSB detector-amplifier, check the following with the power off:

(1) Seating of tubes V1101 through V1109 in their sockets

(2) Cable connections at J1101, J1102, J1103, and TB1101

(3) Soldered connections at chassis feed-through terminals

(4) Mechanical operation of panel controls A.F. LEVEL LINE A, A.G.C. LOWER ON/S.S.B./OFF, A.G.C. LOWER SLOW/FAST, and RECEPTION A.M./S.S.B.

## WARNING

Potentials as high as 210 volts rms are present in the power-supply circuits. Avoid contact.

*d.* TEST EQUIPMENT AND SPECIAL TOOLS.—Use Multimeter AN/PSM-4B, VTVM ME-30/U, VTVM ME-6D/U, and Signal Generator AN/URM-25D. No special tools are required.

*e.* CONTROL SETTINGS.—Set the panel controls to the position shown in table 5-2. Exceptions are made in certain steps of the trouble-shooting chart. Place POWER switch to the ON position and allow 30 seconds for warm-up. Place RECEPTION switch to the SSB position.

*f.* LSB DETECTOR-AMPLIFIER TROUBLE-SHOOTING CHART.—Table 5-17 is the trouble-shooting chart for the LSB detector-amplifier. Perform the steps in the order given. Compare the results with those listed in the NORMAL INDICATION column and follow instructions given in the NEXT STEP column. Table 6-9 gives voltage and resistance measurements for the tube pins.

## 5-22. CONVERTER BLISTER.

*a.* FUNCTION.—The converter blister is a junction box for cable connections to and from the converter and between the converter and the demodulator. Faulty operation of its circuits will seriously impair, or fully disable, receiver operation. Figure 5-74 is a functional schematic diagram of the converter blister circuits.

*b.* ACCESS.—The converter blister is located at the back of the converter cabinet. For access, pull out the converter drawer all the way. Reel E951 in the blister pays out the ac power cable as the drawer is withdrawn, but signal connections are broken. To restore them, connect patch cable W624 between the blister and drawer connection blocks. Figure 5-75 shows the location of parts of the converter blister.

*c.* PRELIMINARY CHECK.—Before trouble-shooting the converter blister, inspect the following with the power off:

(1) Power connections P955 and J605

(2) Cable connections on the outside of the blister.

*d.* TEST EQUIPMENT AND SPECIAL TOOLS.—Besides the patch cable, the only equipment needed to trouble-shoot the blister is Multimeter AN/PSM-4B.

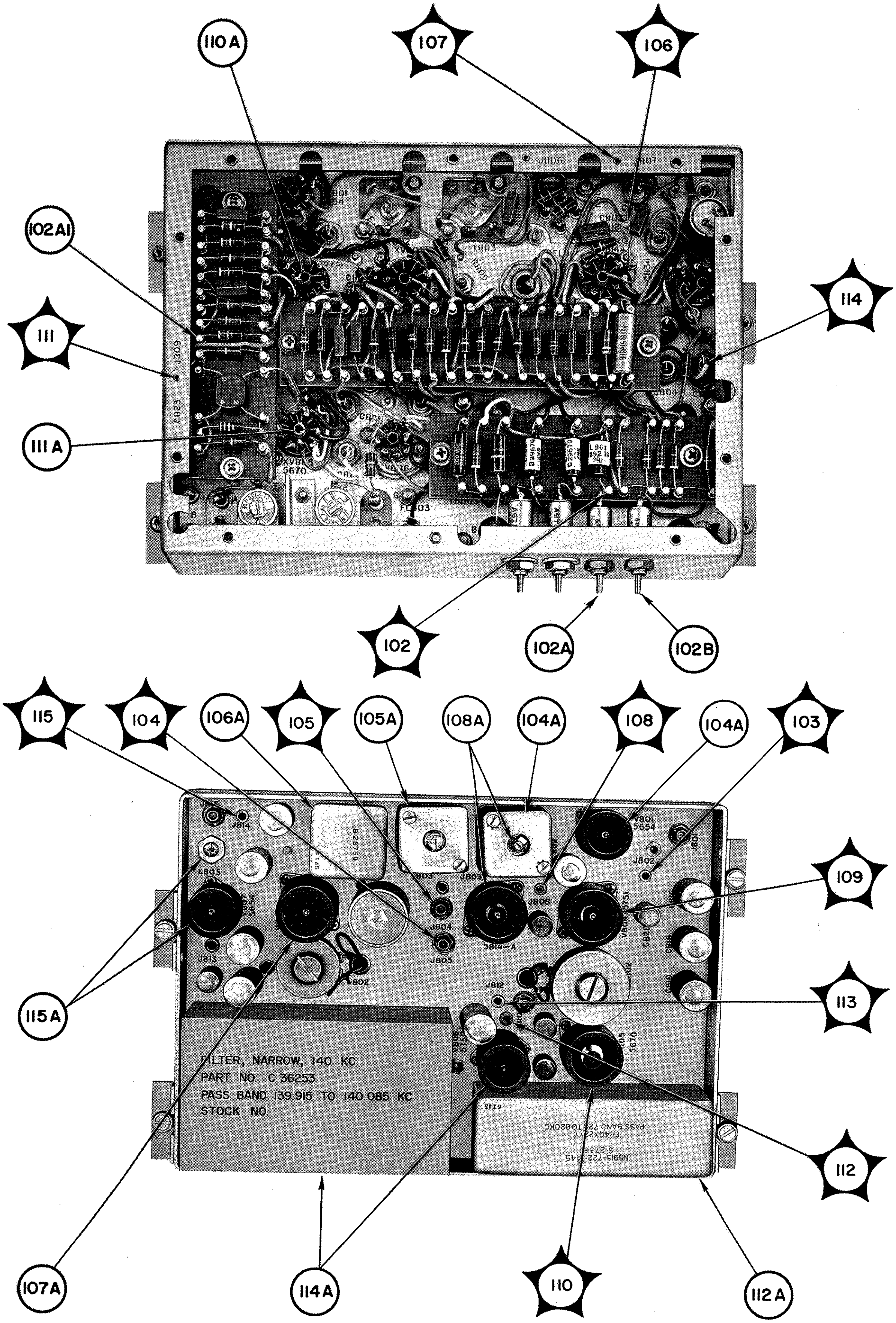

*Figure 5-66. Synthesizer, Location of Test Points*

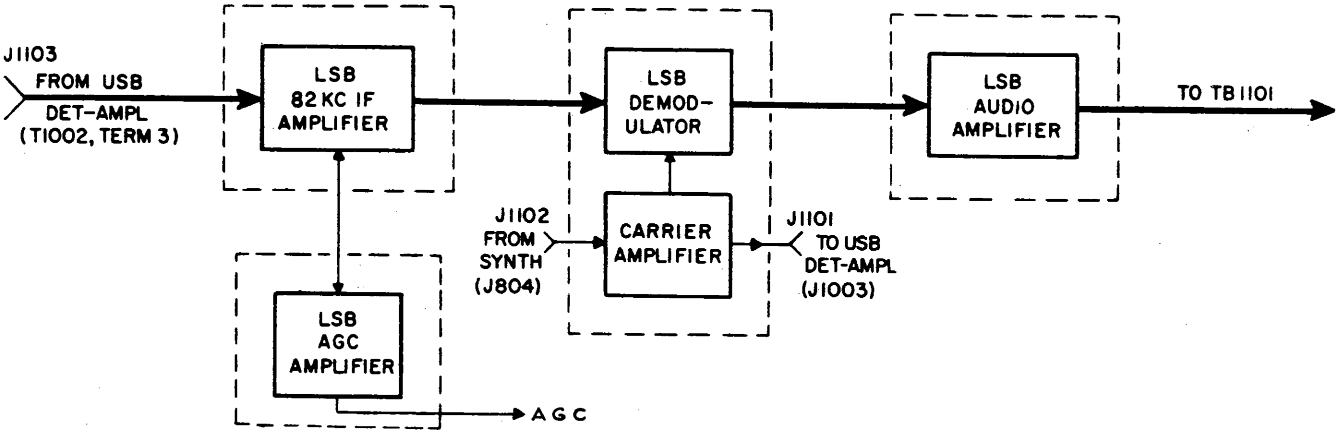

*Figure 5-67. LSB-Amplifier, Functional Block Diagram*

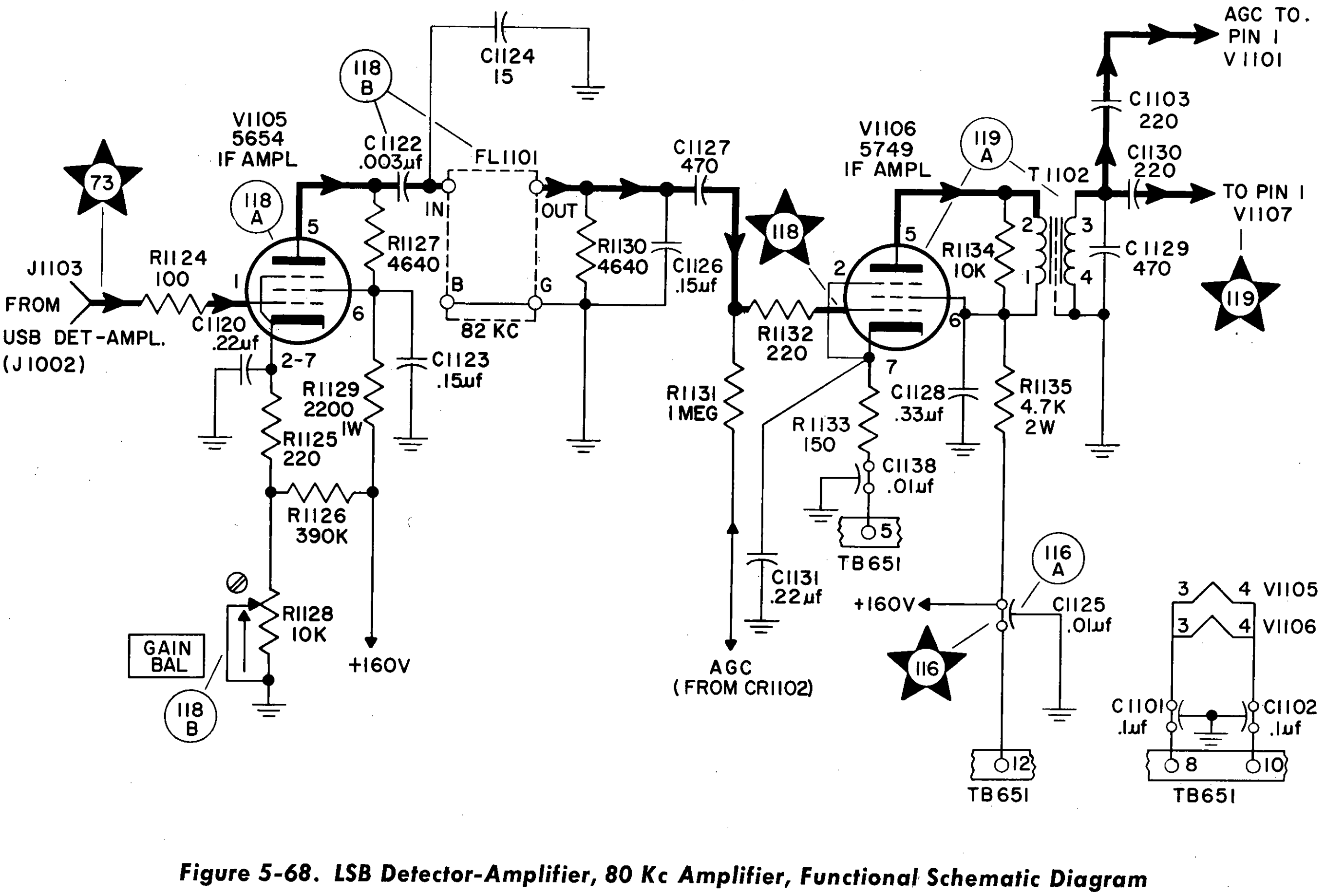

*Figure 5-68. LSB Detector-Amplifier, 80 Kc Amplifier, Functional Schematic Diagram*

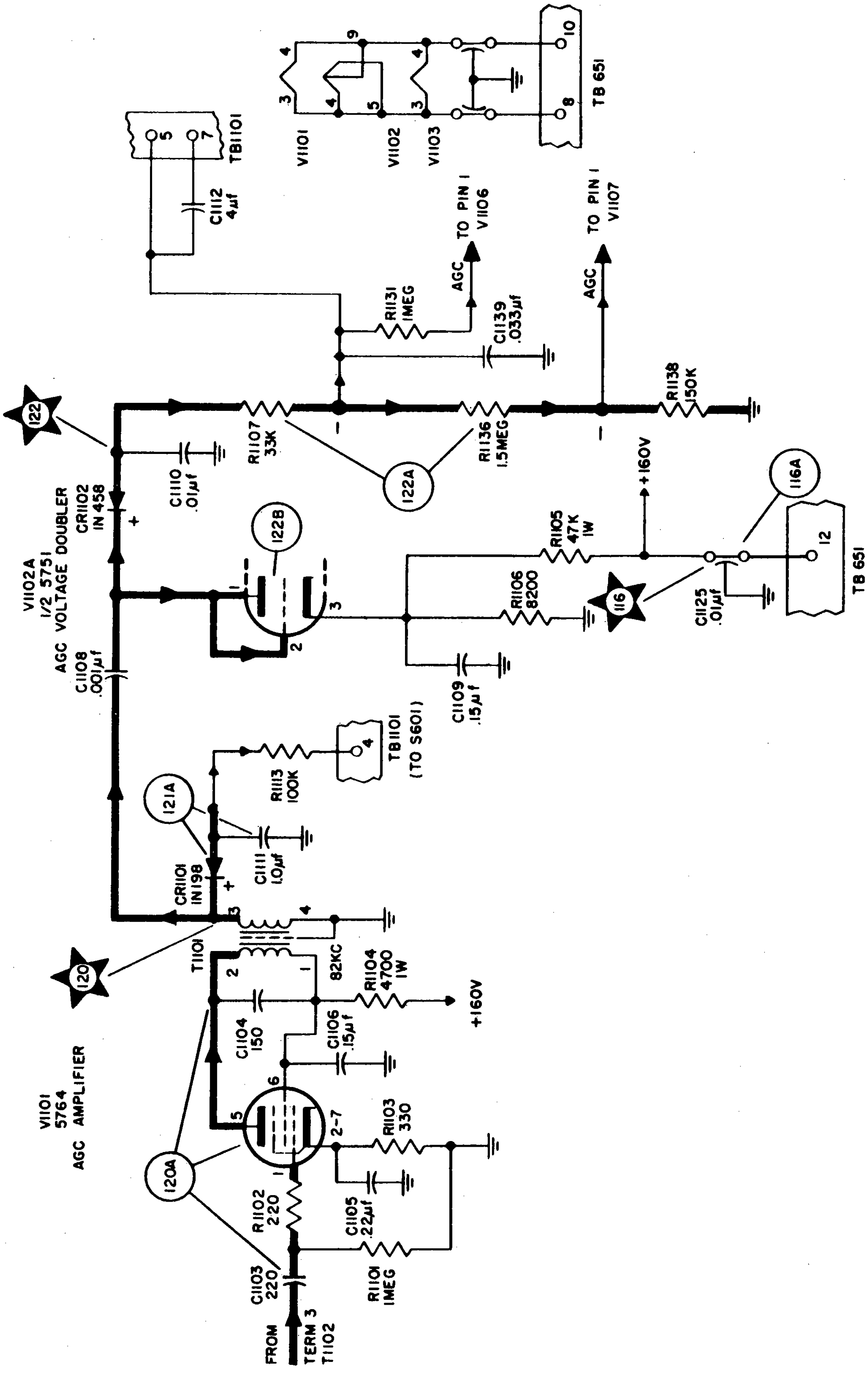

*Figure 5-69. LSB Detector-Amplifier, AGC Amplifier, Functional Schematic Diagram*

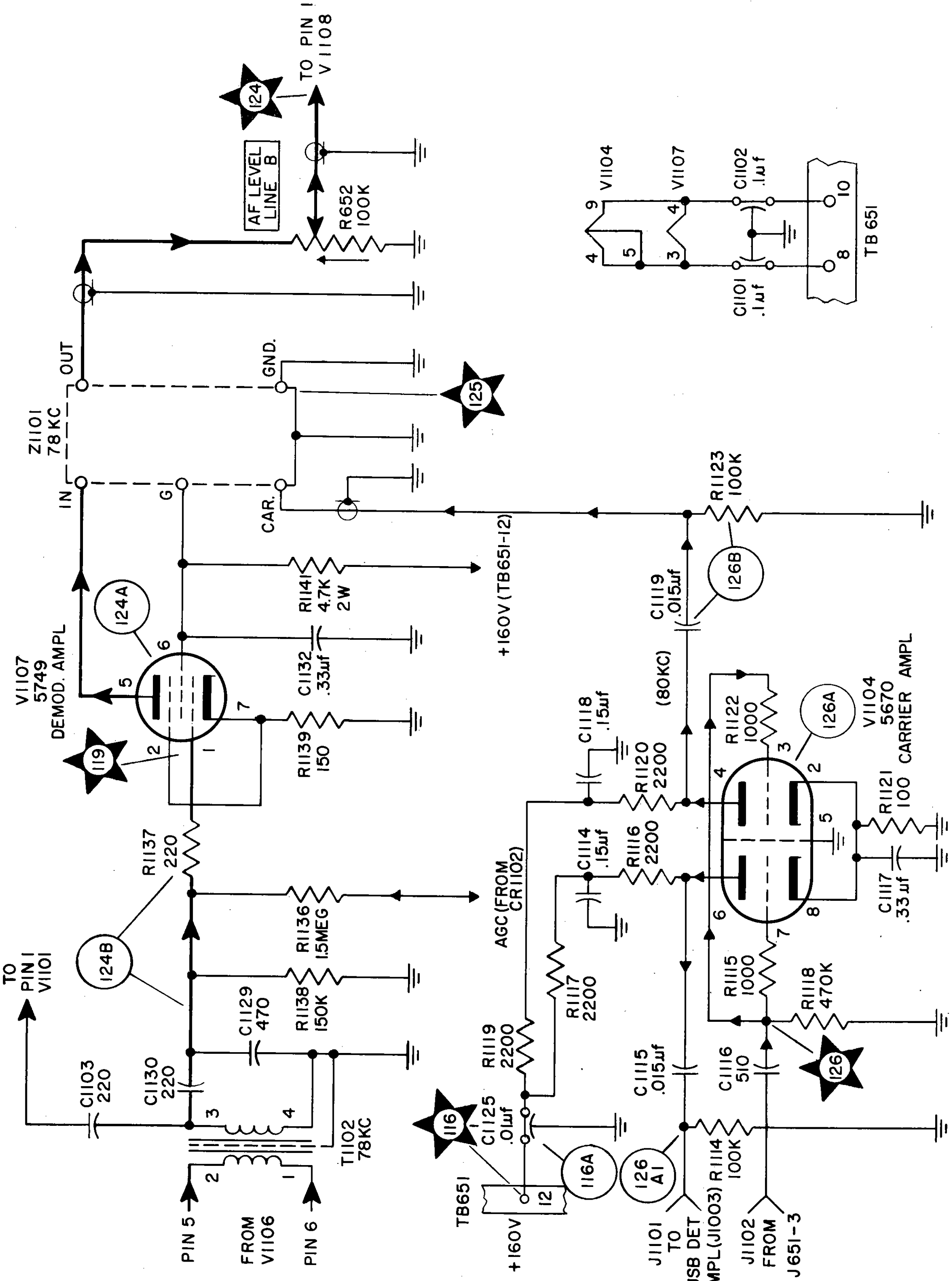

Figure 5-70. LSB Detector-Amplifier, Demodulator and Carrier Amplifier, Functional Schematic Diagram

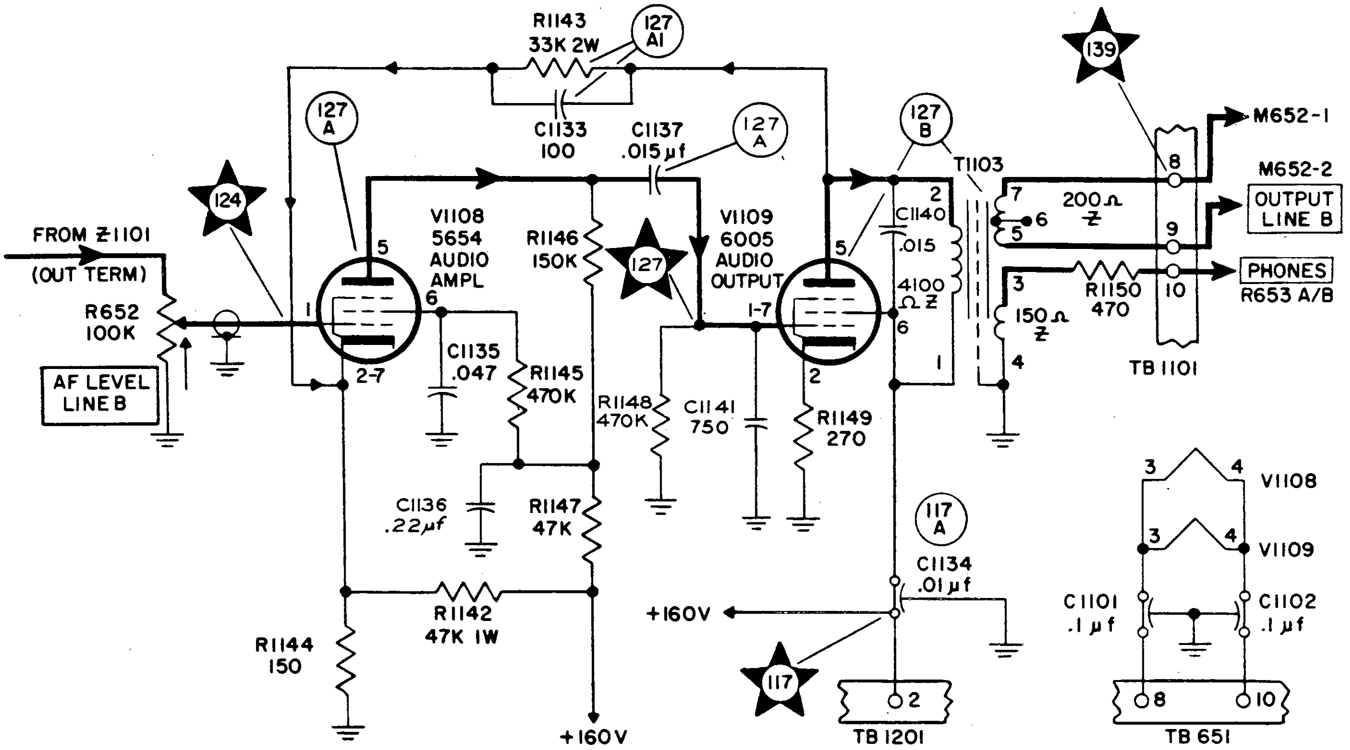

*Figure 5-71. LSB Detector-Amplifier, Audio Amplifier, Functional Schematic Diagram*

*e.* CONTROL SETTINGS.—All tests on the converter blister are made with the power off. Control settings do not affect the trouble-shooting procedures for the converter blister.

*f.* CONVERTER BLISTER TROUBLE-SHOOTING CHART.—Table 5-18 is the trouble-shooting chart for the converter blister. Use the lowest resistance range of the multimeter to measure circuit continuity and the highest range to find high-resistance leakage between normally open circuits. Make measurements at patch-cable connector J601 with P951 plugged into blister connector J951. Perform the steps in the order given, compare the results with those in the NORMAL INDICATION column, and follow the instructions given in the NEXT STEP column. Figure 5-76 shows the location of test points.

It is not necessary to remove the blister for the tests in table 5-18, but it may be removed for a more complete inspection. For removal instructions, see Section 6.

## 5-23. DEMODULATOR BLISTER.

*a.* FUNCTION.—The demodulator blister provides cable terminations for all demodulator input and output connections. It contains also:

(1) RF filter FL1803 (ac power input)

(2) Audio output filters for line A (FL1801) and line B (FL1802)

Faulty operation of the blister will seriously impair, or fully disable, receiver operation. Figure 5-77 is a functional schematic diagram of the demodulator blister.

*b.* ACCESS.—The demodulator blister is at the rear of the demodulator cabinet. For access, simply open the demodulator drawer. This will not break connections. Figure 5-78 shows the location of parts.

*c.* PRELIMINARY CHECK.—Before trouble-shooting the demodulator blister, check the following with the power off:

(1) Connector P1801 (should be secure to J651 on the chassis)

(2) Outside connectors.

For a more thorough inspection, refer to Section 6 for instructions for removing the blister.

*d.* TEST EQUIPMENT AND SPECIAL TOOLS.—Multimeter AN/PSM-4B is the only equipment needed for trouble-shooting the blister.

*e.* CONTROL SETTINGS.—The demodulator blister is tested with the power off. The control settings do not affect the trouble-shooting procedures for the demodulator blister.

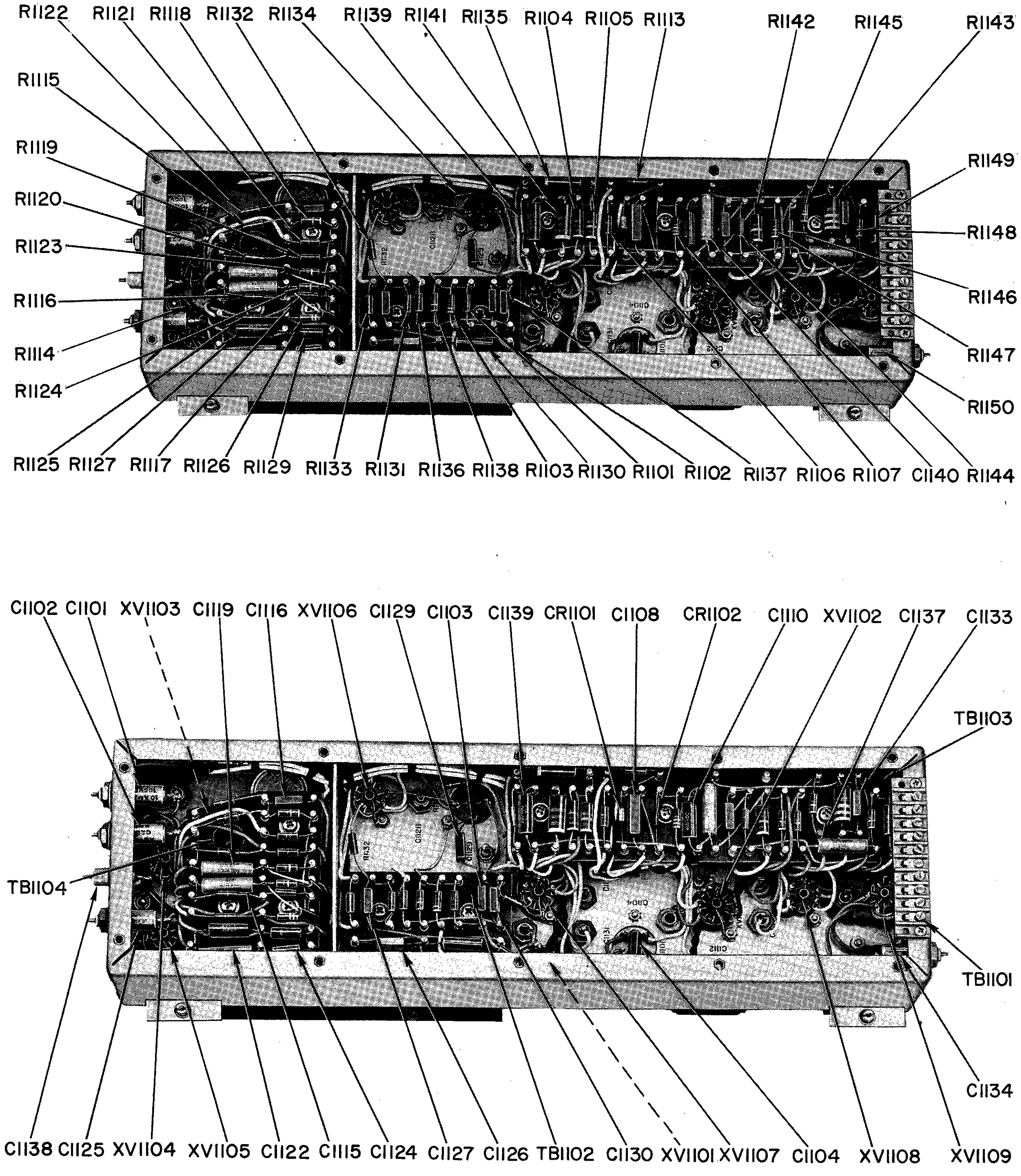

*Figure 5-72. LSB Detector-Amplifier, Location of Parts (Sheet 1 of 2)*

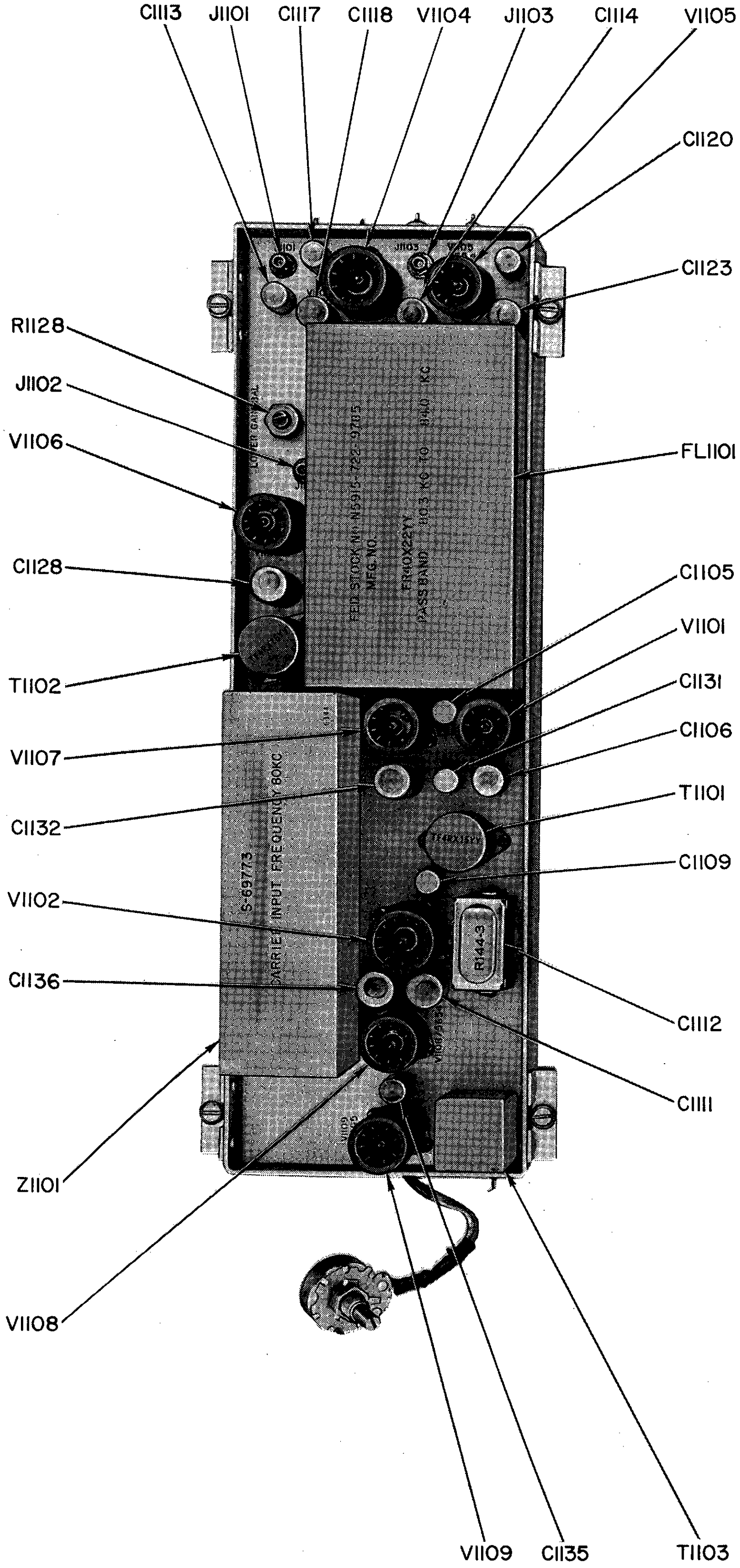

*Figure 5-72. LSB Detector-Amplifier, Location of Parts
(Sheet 2 of 2)*

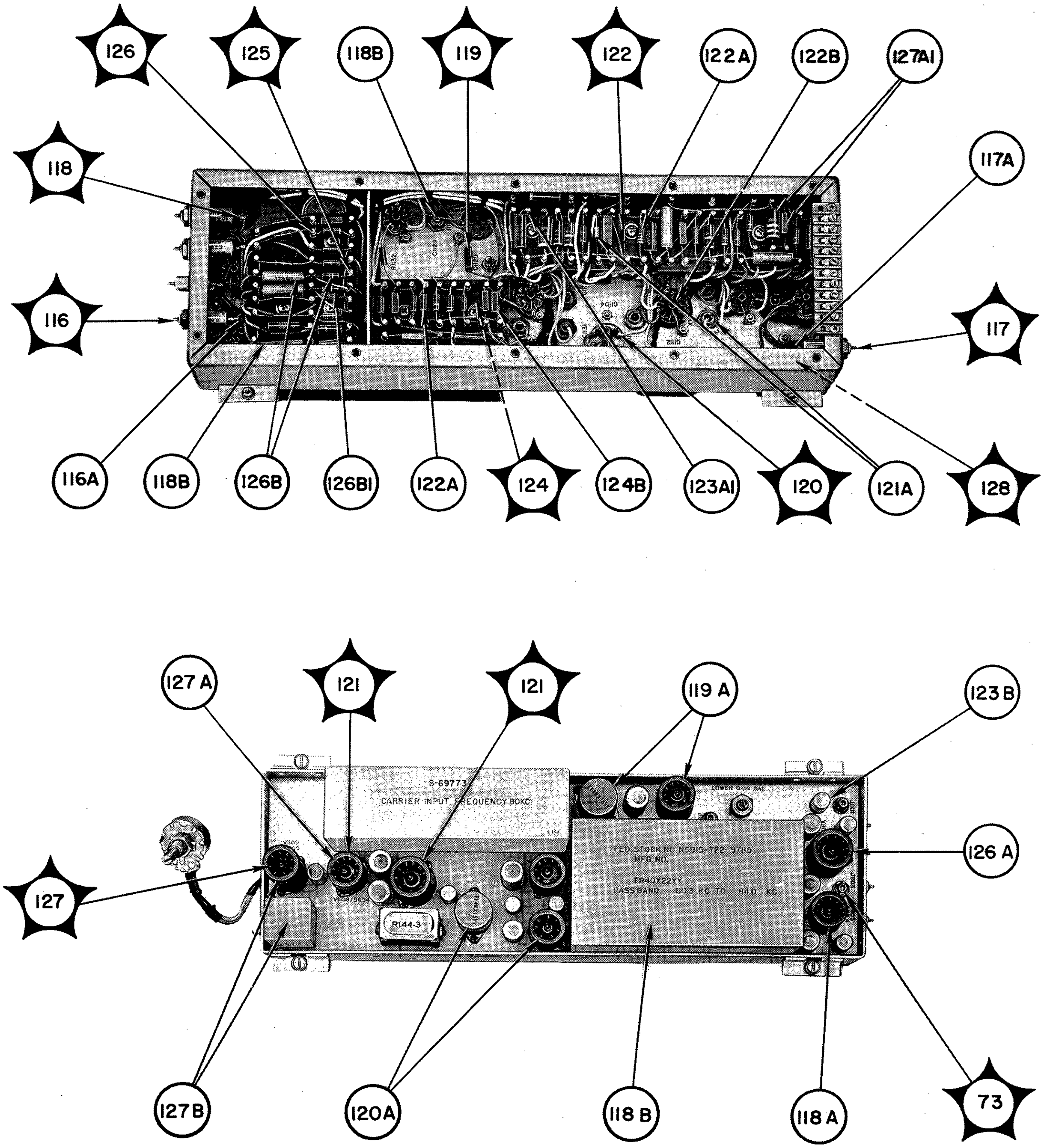

Figure 5-73. LSB Detector-Amplifier, Location of Test Points

## TABLE 5-17. LSB DETECTOR-AMPLIFIER, TROUBLE-SHOOTING CHART

| STEP | TEST POINT | PRELIMINARY ACTION | NORMAL INDICATION | NEXT STEP |
|---|---|---|---|---|
| 1 | 116<br>116A<br>Figs.<br>5-68<br>5-72<br>5-73<br>Table<br>5-6 | Connect multimeter between chassis and feedthrough capacitors. Select the 200 vdc range, tolerance ±20%. | C1125: +170 vdc | If indication is abnormal, refer to table 5-6. Check C1125.<br>WARNING<br>Turn off power before making ohmmeter measurements. |
| | | | | |
| 2 | 118<br>118A<br>118B<br>Figs.<br>5-68<br>5-70<br>5-72<br>5-73<br>119<br>119A | Disconnect plugs P1101, P1102, and P1103 from J1101, J1102, and J1103. Connect signal generator to J1103 through a .01 uf capacitor and adjust for an 81 kc output (180 uv). Set the RF GAIN control fully clockwise. Measure the signal at test points with VTVM ME-30/U.<br>NOTE: RECEPTION switch must be in SSB position for all steps. | V1106 pin 1: 1.0 mv (minimum) | If indication is abnormal, replace V1105. Check socket pin voltages given in table 6-9. Check FL1101, C1122, C1126, and C1127. Refer to Section 6 for GAIN BAL (R1128) adjustment. |
| | | | V1107 pin 1: 9.0 mv (minimum) | If indication is abnormal, replace V1106. Check socket pin voltages. Check T1102, C1129, and C1130. |
| 3 | 124<br>127A<br>Figs.<br>5-70<br>5-71<br>5-72<br>5-73 | With signal generator at J1103 as described in step 2, set the AF LEVEL LINE B control fully clockwise and measure at test points with VTVM ME-30/U. | V1108 pin 1: 60 mv (minimum) | If indication is abnormal, replace V1107. Check socket pin voltages. Check R1136 and R1137. If still abnormal, perform step 4. |
| 4 | 125<br>Figs.<br>5-70<br>5-72<br>5-73 | Connect P1102 with J1102 and measure 80 kc carrier signal at Z1101. Use VTVM ME-30/U. | Z1101 terminal CAR: 2.5 v rms (approx) | If indication is abnormal, perform step 5; otherwise proceed to step 6. Replace V1104. Check socket pin voltages. Check C1119, C1116, and R1123. |

## TABLE 5-17. LSB DETECTOR-AMPLIFIER, TROUBLE-SHOOTING CHART (cont)

| STEP | TEST POINT | PRELIMINARY ACTION | NORMAL INDICATION | NEXT STEP |
|---|---|---|---|---|
| 5 | 126<br>Figs.<br>5-70<br>5-72<br>5-73 | Measure 80 kc carrier signal at junction of R1118 and C1116. Use VTVM ME-30/U. | Junction R1118 and C1116: 1.0 to 1.5 vac | Check connectors of cable W652. Refer to table 5-16. |
| 6 | 127<br>Figs.<br>5-71<br>5-72<br>5-73<br>139<br>Figs.<br>5-77<br>5-78<br>5-79 | With signal generator at J1103 as described in step 2, set AF LEVEL LINE B fully clockwise and measure signal at test points with VTVM ME-30/U. | V1109 pin 1 or 7: 1.25 v rms (minimum) | If indication is abnormal, replace V1108. Check socket pin voltages. Check C1137, and R1143. |
| | | | J1803: 1.9 v rms (minimum); LINE B (600 ohm load connected). Refer to figure 5-77. | If indication is abnormal, replace V1109 with new tube. Check socket pin voltages. Check T1103 and output connections at TB1101. |
| 7 | 120<br>120A<br>122 | To test AGC amplifier circuit, connect the signal generator to J1103 as described in step 2. Place the AGC LOWER switch in ON position and measure the signal at test points with VTVM ME-30/U. Use VTVM for dc measurements. | T1101 terminal 3: 6 v rms (minimum) | If indication is abnormal, replace V1101, check socket pin voltages. Check T1101 and C1103. |
| | 122A<br>Figs.<br>5-69<br>5-72<br>5-73 | | Junction CR1102 and C1110: −6 vdc (minimum) | If indication is abnormal, check diode CR1102 and C1110, R1107, R1136, and R1138. |
| 8 | 122<br>122B<br>Figs.<br>5-69<br>5-72<br>5-73 | To test the AGC voltage doubler circuit (V1102A), place the LOWER AGC switch in the ON position. Increase output of the RF generator to 100 uv and note the increase in AGC voltage at the junction of CR1102 and C1110. | Junction of CR1102 and C1110: −8 vdc (minimum) | If indication is abnormal, replace V1102. Check socket pin voltages. |

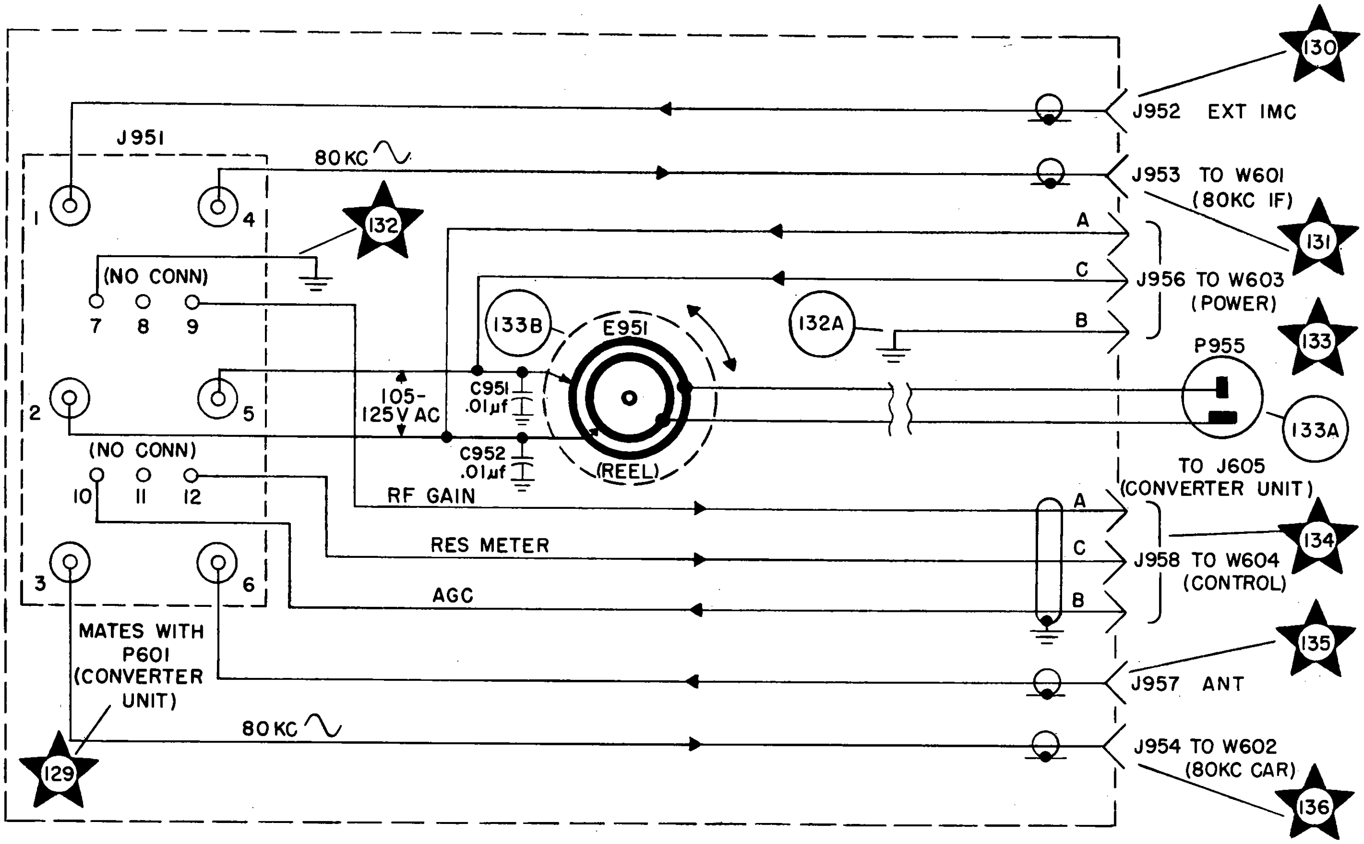

*Figure 5-74. Converter Blister, Functional Schematic Diagram*

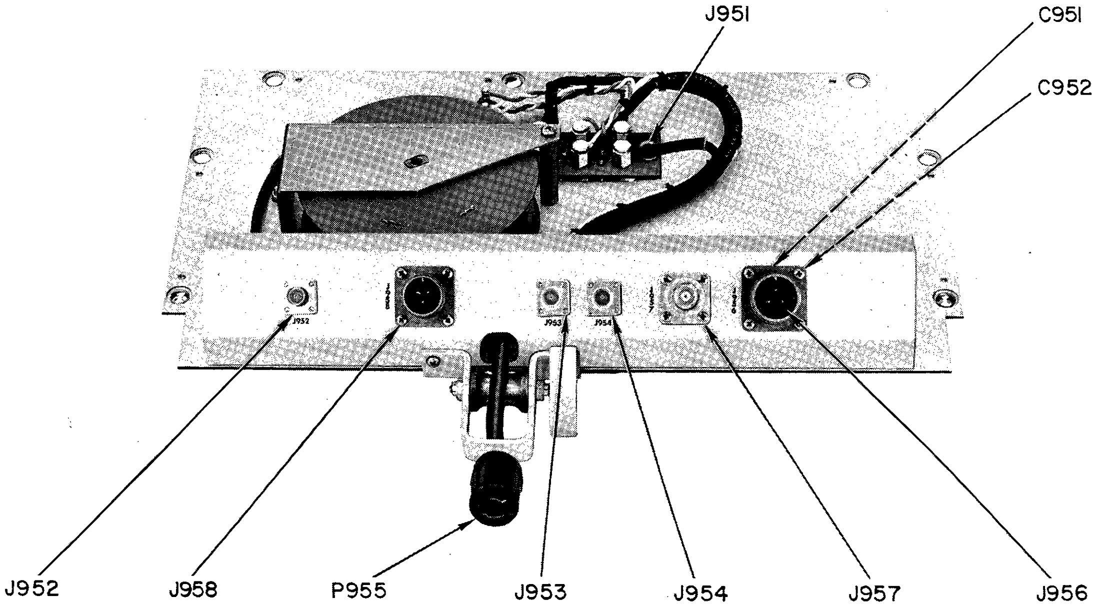

*Figure 5-75. Converter Blister, Location of Parts*

*f.* DEMODULATOR BLISTER TROUBLE-SHOOTING CHART.—Table 5-19 is the trouble-shooting chart for the demodulator blister. Perform the steps in the order given, compare the results with those in the NORMAL INDICATION column, and follow the instructions given in the NEXT STEP column. Figure 5-79 shows the location of test points.

Use the lowest resistance range on the multimeter to check circuit continuity and the highest range to find shorts or high-resistance leakage between normally open circuits. Make all measurements between individual contacts of connector P1801 and the related cable connection on the outside of the blister.

## 5-24. TYPICAL TROUBLES.

Table 5-20 lists typical troubles which may occur during operation of the receiver. The troubles are listed in the order of their likelihood of occurrence, pending receipt of information based on field experience. Figure 5-80 shows the circuit location of chassis test points (tip jacks). Other test points are not indicated. Signal paths may be selected and measurements made at test points to verify circuit operation. When measuring at test points, refer to the trouble-shooting chart for the subassembly being tested.

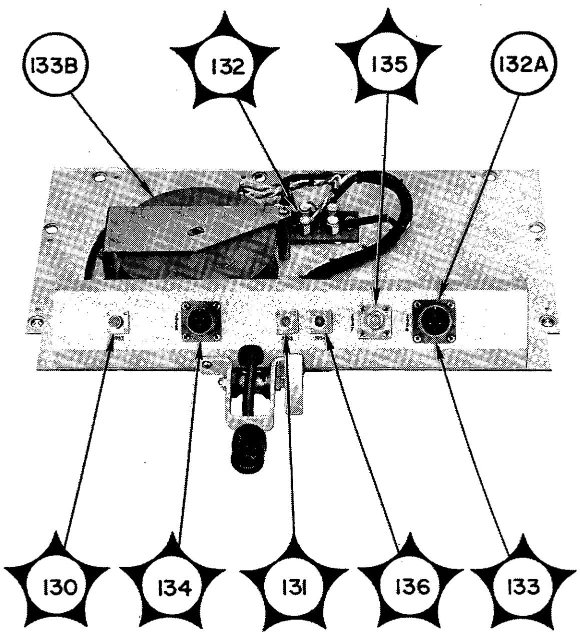

*Figure 5-76. Converter Blister, Location of Test Points*

TABLE 5-18. CONVERTER BLISTER, TROUBLE-SHOOTING CHART

| STEP | TEST POINT | PRELIMINARY ACTION | NORMAL INDICATION | NEXT STEP |
|---|---|---|---|---|
| 1 | 129<br>130<br>Figs.<br>5-74<br>5-75<br>5-76 | With the multimeter at appropriate ohmic range, check the circuits continuity between terminal 1 of connectors J601 on patch cable and J952. | J601 terminal 1 to J952: 0 ohms | If indication is abnormal, check patch cable. Remove blister and repair circuit. See Section 6 for removal instructions. |
| | | Check for short circuit or leakage between terminal 1 of J601 and terminals 2 through 12 of J601 (excluding terminals 8 and 11). | J601 terminal 1 to remaining terminals of J601: infinity | If indication is abnormal, see step 1. |
| 2 | 129<br>131<br>Figs.<br>5-74<br>5-75<br>5-76 | Check circuit continuity from terminal 4 of J601 to J953. | J601 terminal 4 to J953: 0 ohms | If indication is abnormal, see step 1. |
| | | Check for short circuit from terminal 4 of J601 to remaining terminals (5, 6, 7, 9, 2, 3, 10, and 12). | J601 terminal 4 to remaining terminals of J601: infinity | If indication is abnormal, see step 1. |
| 3 | 132<br>Figs.<br>5-74<br>5-75<br>5-76 | Check circuit continuity from terminal 7 of J601 to blister chassis. | J601 terminal 7 to chassis: 0 ohms | If indication is abnormal, see step 1. |
| | | Check for short circuit from terminal 7 of J601 to remaining terminals (5, 6, 9, 2, 3, 10, and 12). | J601 terminal 7 to remaining terminals: infinity | If indication is abnormal, see step 1. |

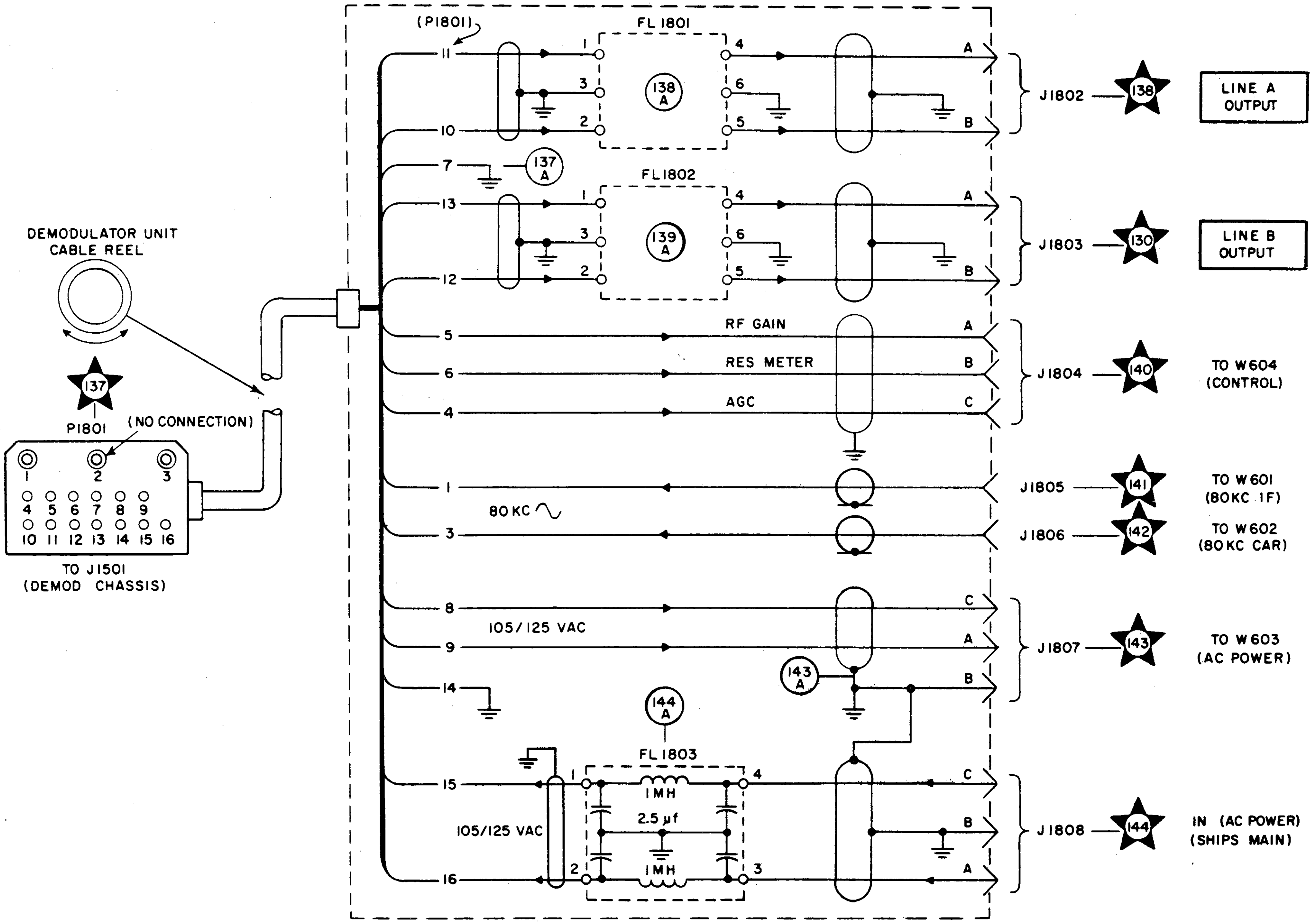

Figure 5-77. Demodulator Blister, Functional Schematic Diagram

## TABLE 5-18. CONVERTER BLISTER, TROUBLE-SHOOTING CHART (cont)

| STEP | TEST POINT | PRELIMINARY ACTION | NORMAL INDICATION | NEXT STEP |
|---|---|---|---|---|
| 4 | 132A | Check circuit continuity from terminal 7 of J601 to terminal B of J956. | J601 terminal 7 to terminal B of J956: 0 ohms | If indication is abnormal, see step 1. |
| 5 | 133<br>Figs.<br>5-74<br>5-75<br>5-76 | Check circuit continuity from terminal 5 of J601 to terminal C of J956 (ac power connector P955 to be detached from J605 for this test). | J601 terminal 5 to terminal A of J956: 0 ohms | If indication is abnormal, see step 1. |
| | | Check for short circuit from terminal 5 of J601 to remaining terminals (6, 9, 2, 3, 10, 12), with P955 removed from J605. | J605 terminal 5 to remaining terminals of J601: infinity | If indication is abnormal, see step 1. |
| 6 | 129<br>Figs.<br>5-74<br>5-75<br>5-76 | Check circuit continuity from terminal 5 of J601 to associated terminal P955. | J601 terminal 5 to P955: 0 ohms | If indication is abnormal, see step 1. Check contacts on reel E951. |
| 7 | 133<br>Figs.<br>5-74<br>5-75<br>5-76 | Check circuit continuity from terminal 2 of J601 to terminal A of J956. (P955 removed from J605.) | J601 terminal 2 to terminal A of J956: 0 ohms | If indication is abnormal, see step 1. |
| | | Check for short circuit from terminal 2 of J601 to remaining terminals (6, 9, 3, 10, and 12). P955 removed from J605. | J601 terminal 2 to remaining terminals of J601: infinity | If indication is abnormal, see step 1. |
| 8 | 133A<br>133B | Check circuit continuity from terminal 2 of J601 to associated terminal on P955. | J601 terminal 2 to P955: 0 ohms | If indication is abnormal, see step 1. Check contacts on reel E951. |
| 9 | 134<br>Figs.<br>5-74<br>5-75<br>5-76 | Check circuit continuity from terminal 9 of J601 to terminal A of J958. | J601 terminal 9 to terminal A of J958: 0 ohms | If indication is abnormal, see step 1. |
| | | Check for short circuit from terminal 9 of J601 to remaining terminals (6, 3, 10, and 12). | J601 terminal 9 to remaining terminals of J601: infinity | If indication is abnormal, see step 1. |
| 10 | 134<br>Figs.<br>5-74<br>5-75<br>5-76 | Check circuit continuity from terminal 12 of J601 to terminal C of J958. | J601 terminal 12 to terminal C of J958: 0 ohms | If indication is abnormal, see step 1. |
| | | Check for short circuit from terminal 12 of J651 to remaining terminals (6, 3, and 10). | J601 terminal 12 to remaining terminals: infinity | If indication is abnormal, see step 1. |

## TABLE 5-18. CONVERTER BLISTER, TROUBLE-SHOOTING CHART (cont)

| STEP | TEST POINT | PRELIMINARY ACTION | NORMAL INDICATION | NEXT STEP |
|---|---|---|---|---|
| 11 | 134<br>Figs.<br>5-74<br>5-75<br>5-76 | Check circuit continuity from terminal 10 of J601 to terminal B of J958. | J601 terminal 10 to terminal B of J958: 0 ohms | If indication is abnormal, see step 1. |
| | | Check for short circuit from terminal 10 of J601 to remaining terminals (6 and 3). | J601 terminal 10 to remaining terminals: infinity | If indication is abnormal, see step 1. |
| 12 | 135<br>Figs.<br>5-74<br>5-75<br>5-76 | Check circuit continuity from terminal 6 of J601 to J957. | J601 terminal 6 to J957: 0 ohms | If indication is abnormal, see step 1. |
| | | Check for short circuit from terminal 6 of J601 to remaining terminal (3). | J601 terminal 6 to remaining terminal (3): infinity | If indication is abnormal, see step 1. |
| 13 | 136<br>Figs.<br>5-74<br>5-75<br>5-76 | Check circuit continuity from terminal 3 of J601 to J954. | J601 terminal 3 to J954: 0 ohms | If indication is abnormal, see step 1. |

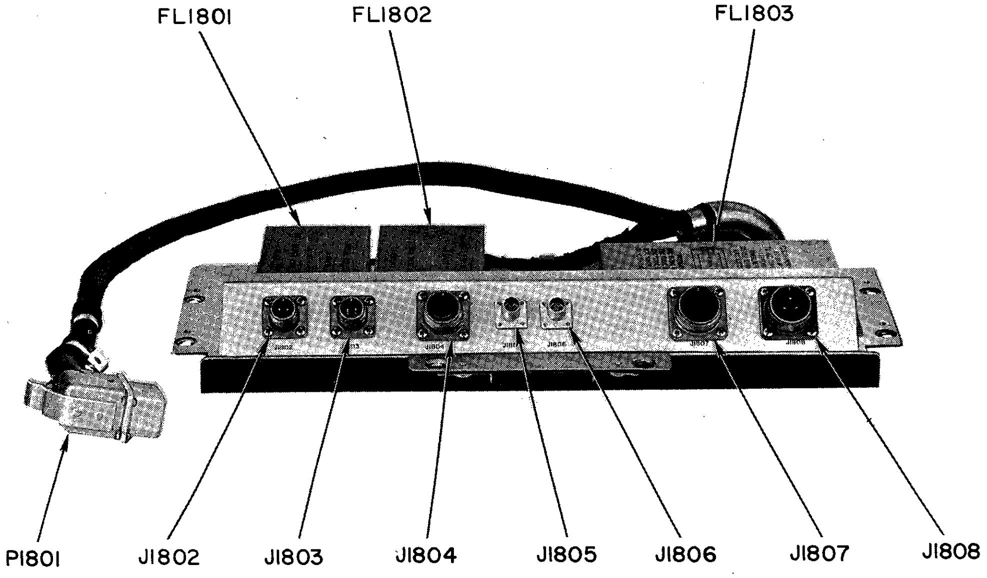

*Figure 5-78. Demodulator Blister, Location of Parts*

## TABLE 5-19. DEMODULATOR BLISTER, TROUBLE-SHOOTING CHART

| STEP | TEST POINT | PRELIMINARY ACTION | NORMAL INDICATION | NEXT STEP |
|---|---|---|---|---|
| 1 | 137<br>138<br>Figs. 5-77<br>5-78<br>5-79 | With the multimeter at the appropriate ohms range, check continuity from terminal 11 of P1801 to terminal A of J1802. | P1801 terminal 11 to terminal A J1802: 0.1 ohms | If indication is abnormal, remove blister and test FL1801. Check circuit wiring. See par. 6-5*c*(6) for removal instructions. |
| | | Check continuity from terminal 10 of P1801 to terminal B of J1802. | P1801 terminal 10 to terminal B J1802: 0.1 ohms | See step 1. |
| | | Check for short circuit between terminals 11 and 10 of P1801. | P1801, terminals 11 and 10: infinity | See step 1. |
| | | Check for short circuit between terminals A and B of J1802. | J1802, terminals A and B: infinity | See step 1. |
| 2 | 137A | Check continuity from terminal 14 of P1801 to blister chassis. | P1801, terminal 14 to chassis: 0 ohms | If indication is abnormal, remove blister and check wiring. |
| 3 | 137<br>139<br>Figs. 5-77<br>5-78<br>5-79 | Check continuity from terminal 13 of P1801 to terminal A of J1803. | P1801 terminal 13 to terminal A of J1803: 0.1 ohms | If indication is abnormal, remove blister and test FL1802. Check circuit wiring. |
| | | Check continuity from terminal 12 of P1801 to terminal B of J1803. | P1801 terminal 12 to terminal B of J1803: 0.1 ohms | See step 2. |
| | | Check for short circuit between terminals 13 and 12 of P1801. | P1801, terminals 13 and 12: infinity | See step 2. |
| | | Check for short circuit between terminals A and B of J1803. | J1803, terminals A and B: infinity | See step 2. |
| 4 | 137<br>140<br>Figs. 5-77<br>5-78<br>5-79 | Check continuity from terminal 5 of P1801 to terminal A of J1804. | P1801 terminal 5 to terminal A of J1804: 0 ohms | See step 2. |
| | | Check for short circuit between terminal 5 of P1801 and all other terminals of P1801. | P1801 terminal 5 to all other terminals of P1801: infinity | See step 2. |
| | | Check continuity from terminal 6 of P1801 to terminal B of J1804. | P1801 terminal 6 to terminal B of J1804: 0 ohms | See step 2. |
| | | Check for short circuit between terminal 6 of P1801 remaining terminals (1, 2, 3, 4, 7, 8, 9, 10, 11, 12, 13, 14, 15, 16). | P1801 terminal 6 to all remaining terminals: infinity | See step 2. |
| | | Check continuity from terminal 4 of P1801 to terminal C of J1804. | P1801 terminal 4 to terminal C of J1804: 0 ohms | See step 2. |

## TABLE 5-19. DEMODULATOR BLISTER, TROUBLE-SHOOTING CHART (cont)

| STEP | TEST POINT | PRELIMINARY ACTION | NORMAL INDICATION | NEXT STEP |
|---|---|---|---|---|
| | | Check for short circuit between terminal 4 of P1801 and remaining terminals (1, 3, 8, 9, 10, 11, 12, 13, 14, 15, 16). | P1801 terminal 4 to all remaining terminals: infinity | See step 2. |
| 5 | 137<br>141<br>Figs. 5-77 5-78 5-79 | Check continuity from terminal 1 of P1801 to J1805. | P1801 terminal 1 to J1805: 0 ohms | See step 2. |
| | | Check for short circuit between terminal 1 of P1801 and remaining terminals (3, 7, 8, 9, 10, 11, 12, 13, 14, 15, 16). | P1801 terminal 1 to remaining terminals: infinity | See step 2. |
| 6 | 142 | Check continuity from terminal 3 of P1801 to J1806. | P1801 terminal 3 to J1806: 0 ohms | See step 2. |
| 7 | 137<br>Figs. 5-77 5-78 5-79 | Check for short circuit between terminal 3 of P1801 and remaining terminals (7, 8, 9, 10, 11, 12, 13, 14, 15, and 16). | P1801 terminal 3 to remaining terminals: infinity | See step 2. |
| 8 | 137<br>143<br>Figs. 5-77 5-78 5-79 | Check continuity from terminal 8 of P1801 to terminal A of J1807. | P1801 terminal 8 to terminal A of J1807: 0 ohms | See step 2. |
| | | Check for short circuit between terminal 8 of P1801 and remaining terminals (7, 9, 10, 12, 11, 13, 14, 15, and 16). | P1801 terminal 8 to remaining terminals: infinity | See step 2. |
| | | Check continuity from terminal 9 of P1801 to terminal C of J1807. | P1801 terminal 9 to terminal C of J1807: 0 ohms | See step 2. |
| | | Check for short circuit between terminal 9 of P1801 and remaining terminals (7, 10, 11, 12, 13, 14, 15, and 16). | P1801 terminal 9 to remaining terminals: infinity. | See step 2. |
| | | Check for continuity between terminal B of J1807 and blister chassis. | J1807 terminal B to chassis: 0 ohms. | See step 2. |
| | | Check for short circuit between blister chassis and all P1801 terminals. | Blister chassis to all P1801 terminals: infinity except 14 which should indicate 0 ohms. | See step 2. |

## TABLE 5-19. DEMODULATOR BLISTER, TROUBLE-SHOOTING CHART (cont)

| STEP | TEST POINT | PRELIMINARY ACTION | NORMAL INDICATION | NEXT STEP |
|---|---|---|---|---|
| 9 | 137 | Check continuity from terminal 15 of P1801 to terminal A of J1808. | P1801 terminal 15 to terminal A of J1808: 0.02 ohms. | If indication is abnormal, remove blister and test FL1803. Check circuit wiring. |
| | 144 | Check continuity from terminal 16 of P1801 to terminal C of J1808. | P1801 terminal 16 to terminal C of J1808: 0.02 ohms. | See above. |
| | Figs.<br>5-77<br>5-78<br>5-79 | Check for short circuit between terminals 15 and 16 of P1801. | P1801 terminal 15 to 16: infinity. | If indication is abnormal, remove blister and test FL1803. Check circuit wiring. |
| | | Check continuity from terminal B of J1808 to blister chassis. | J1808 terminal B to chassis: 0 ohms. | See above. |

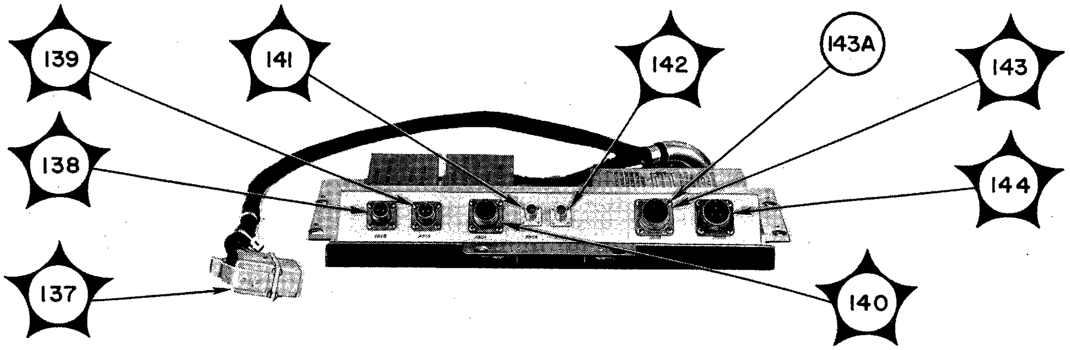

*Figure 5-79. Demodulator Blister, Location of Test Points*

## TABLE 5-20. RADIO RECEIVING SETS AN/WRR-2 AND AN/FRR-59, TYPICAL TROUBLES

| SYMPTOM | REMEDY PROBABLE CAUSE | REMEDY PROBABLE CAUSE |
|---|---|---|
| No reception with ANT. CPLG. switch in the NOR. position. | Blown fuse in antenna coupling sub-assembly | Replace fuse F2801 with SPARE fuse. |
| Blower BL651 does not operate. | 1. Switch S651 is open and temperature in cabinet is below 112°F, the point at which thermostat switch S651 closes to operate blower.<br>2. Blower circuit fuse F652 is blown.<br>3. Blower thermostat switch S651 is defective. | None.<br>Replace F652 with SPARE fuse.<br>Replace thermostat switch S651. See figure 5-1. |
| PHASE OR TEMP. meter M602 does not indicate. | Defective oven-oscillator tube | Check tubes V701, V702, and V703 and replace defective tube. See table 5-14. |
| BFO does not function normally. | Defective BFO tube or voltage-regulator tube | Check tubes V1610 and V1611 and replace defective tube. See table 5-9. |
| AM reception but no SSB reception. | Defective carrier-amplifier tube | Check tube V1104 and replace if necessary. See table 5-17. |
| AM reception but signal is distorted and RESONANCE meter M601 does not indicate. | Defective AGC amplifier tube in AM detector-amplifier | Check tube V1605 and replace if necessary. See table 5-17. |
| No reception; TUNING meters (100 KC and 0.5 KC) do not indicate when receiver is tuned to an incremental frequency. | Defective HF oscillator tube or defective tube in frequency divider. | Check tubes V301, V451, V452, and V453 and replace those defective. See tables 5-10 and 5-15. |
| SSB reception but no AM reception. | Defective tube in AM detector-amplifier | Check tubes V1601 through V1609 and replace. See table 5-9. |
| No reception; 0.5 KC TUNING meter does not indicate when receiver is tuned to an incremental frequency. | Defective interpolator oscillator tube | Check tube V401 and replace if faulty. See table 5-12. |
| AM reception but no SSB reception. | Defective IF amplifier tube in USB detector-amplifier (this tube common to both USB and LSB detector-amplifiers) | Check V1003. See table 5-13. |
| Incremental tuning meters drift requiring frequent adjustment of TUNING controls. Output meters not affected. | Intermittent or defective voltage-regulator tubes in converter power supply | Check V901, V902, and V903 in the converter power supply. See table 5-5. |
| Reception normal but AM detector-amplifier silencer circuit does not operate. | Defective AM silencer tube | Check V1608. See table 5-9. |
| When crystal oscillator is calibrated with external frequency standard, required correction can not be made; INT. STD. counter is at end of scale. | Normal change in frequency of crystal Y1 over long period has exceeded correction range of INT. STD. trimmer | Connect capacitor C746 in parallel with C716 in crystal oscillator circuit. See figure 5-53 and table 5-14. |
| Receiver does not operate; all panel meters, including PHASE OR TEMP., inoperative. | Defective tube in crystal oscillator or frequency divider of crystal oscillator | Check tubes V704 through V709. See table 5-14. |

Blank

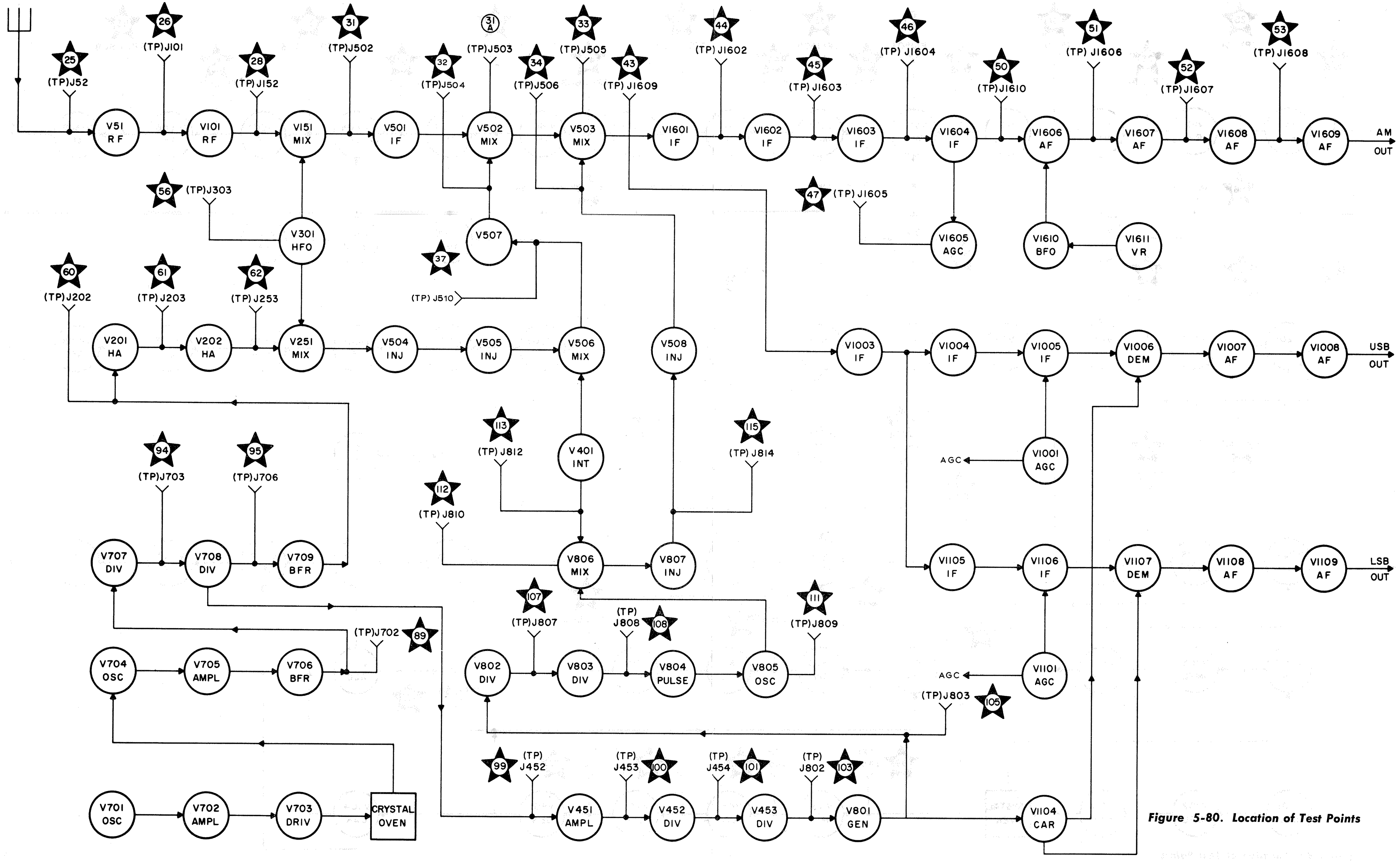

*Figure 5-80. Location of Test Points*

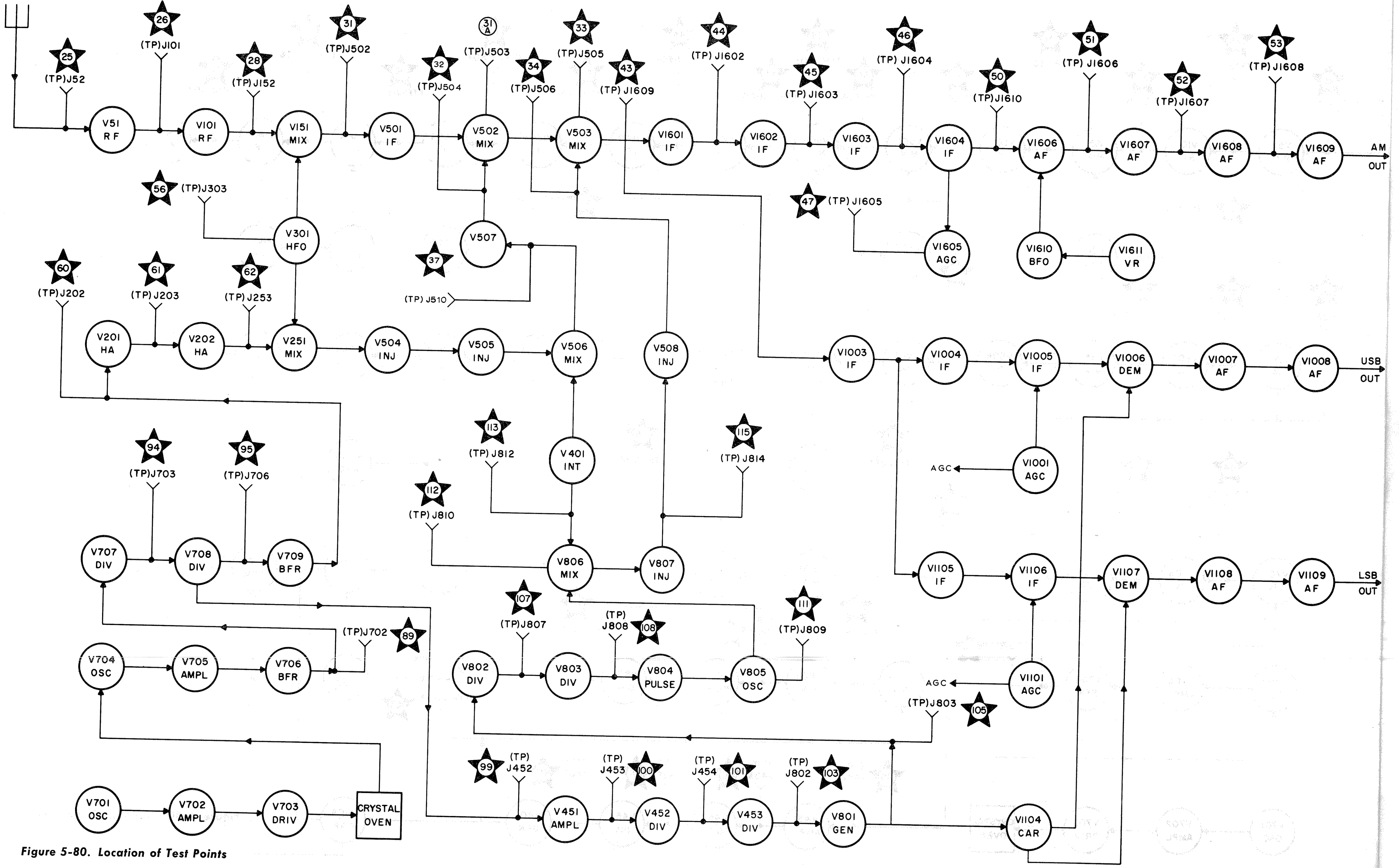

Figure 5-80. Location of Test Points